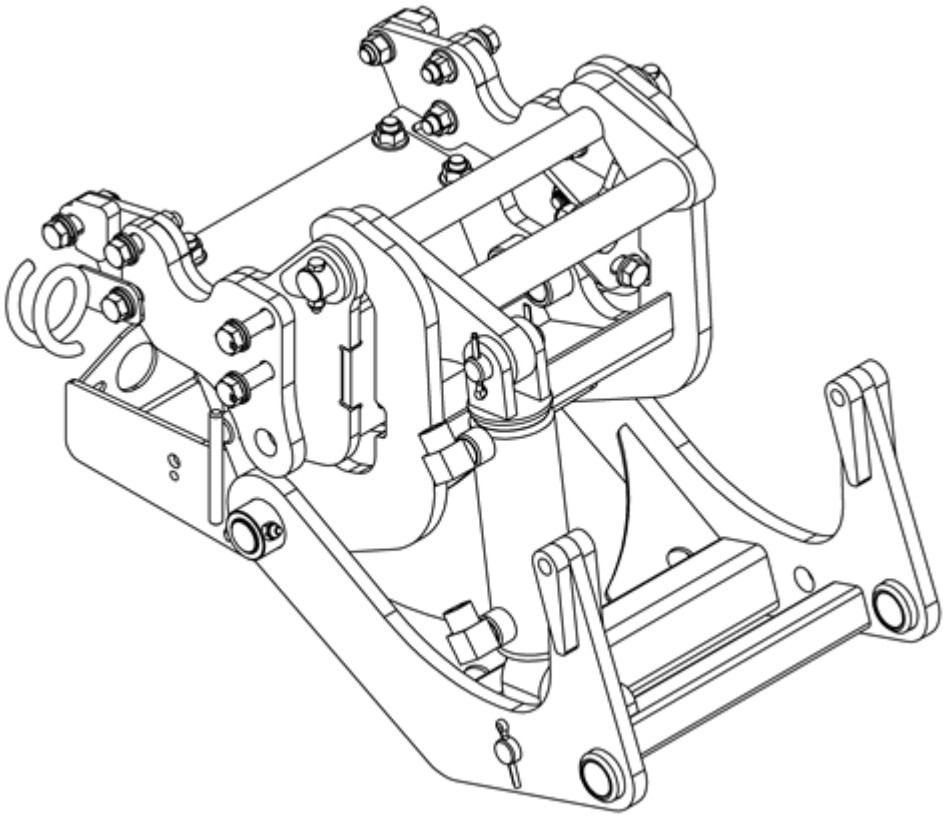

OPERATOR'S AND AND PARTS MANUAL

SUBFRAME S1SB-54A FOR JOHN DEERE TRACTOR SERIES 1

SERIAL NUMBER 22100001 AND UP

OM 0495QH-A
Rev0 04-21

INTRODUCTION

TO THE PURCHASER

All products are designed to give safe, dependable service if they are operated and maintained according to instructions. **Read and understand this manual before operation and keep it in your files for further reference.**

This manual has been prepared to assist the owner and operators in the safe operation and suitable maintenance of the equipment. The information is applicable to products at the time of manufacture and does not include modifications made afterwards.

Read and understand this operator's manual before attempting to put equipment into service. Familiarize yourself with the operating instructions **AND ALL THE SAFETY RECOMMENDATIONS** contained in this manual and those labeled on the equipment and on the machine. Follow the safety recommendations and make sure that those with whom you work follow them.

TO THE DEALER

Give this manual to the owner upon delivery of the equipment.

TO THE PURCHASER AND THE DEALER

Illustrations

The illustrations may not necessarily reproduce the full detail and the exact shape of the parts or depict the actual models, but are for reference only.

Direction Reference

All references to right and left, forward or rearward are from the operator seat. looking at the equipment in operation.

To assist your dealer in handling your needs, please record hereafter the model number and serial number of your equipment and machine. It is also advisable to supply them to your insurance company. It will be helpful in the event that equipment or machine is lost or stolen

MODEL: _____

SERIAL NUMBER: _____

DATE OF PURCHASE: _____

DEALER NAME: _____

DEALER TELEPHONE NUMBER: _____

INTRODUCTION

All products are designed to give safe, dependable service if they are operated and maintained according to instructions. **Read and understand this manual before operation**. It is the owner's responsibility to be certain anyone operating this product reads this manual, and all other applicable manuals, to become familiar with this equipment and all safety precautions. Failure to do so could result in serious personal injury or equipment damage. If you have any questions, consult your dealer.

SAFETY FIRST

This symbol, the industry's "Safety Alert Symbol", is used throughout this manual and on labels on the machine itself to warn of the possibility of personal injury. Read these instructions carefully. It is essential that you read the instructions and safety regulations before you attempt to assemble or use this unit.

DANGER :	Indicates an imminently hazardous situation which, if not avoided, will result in death or serious injury.
WARNING :	Indicates a potentially hazardous situation which, if not avoided, could result in death or serious injury.
CAUTION :	Indicates a potentially hazardous situation which, if not avoided, may result in minor or moderate injury.
IMPORTANT :	Indicates that equipment or property damage could result if instructions are not followed.
NOTE :	Gives helpful information.

TABLE OF CONTENTS

INTRODUCTION 1

TABLE OF CONTENTS 3

SAFETY INFORMATION 5

GENERAL SAFETY INFORMATION- Pictograms 7

ESTIMATED ASSEMBLY TIME 9

ASSEMBLY 10

Assembly of the male 4 Point Hitch and subframe 10

Installation of Supports 11

Installing the Auto Connect Mower Brackets- WITH the Front Loader 12

Installing the Auto Connect Mower Brackets- WITHOUT Front loader 13

Installation of Spacers WITHOUT the front protector - Front loader 14

Installation of the Spacers WITH the front protector - Front loader 15

Installing the Mower Brackets- WITH or WITHOUT the front protector - Front loader 16

Installing the Support reinforcement 17

Installation of the hose support 18

Assembly of the Male Quick Hitch to the subframe 19

Installation of the Hydraulic Cylinder 20

Installation of the Output Shaft 21

Installation of the Assembled Subframe on the Tractor 23

Installation of Hydraulic Components 24

Connecting Hydraulic Hoses to the Tractor 25

Installation of Driveline 26

TABLE OF CONTENTS

OPERATION 27

General Preparation 27

Operation 27

Controls 27

Procédure for Connecting and Disconnecting the Snowblower 28

Precautions to follow BEFORE each connection 27

Procedure to follow to connect the snowblower 29

Procedure to follow BEFORE each disconnection 32

Procedure to follow to disconnect the snowblower 31

Removing the Subframe from the Tractor 34

Reinstalling the Subframe on the Tractor 36

MAINTENANCE 38

Maintenance Schedule 38

Lubrification 39

TROUBLESHOOTING 40

STORAGE 41

PARTS 42

Hitch and Subframe 42

Drive Kit 44

Fixed Driveline 4700050 45

Male Driveline 4700047 46

TORQUE SPECIFICATION TABLE 47

ADAPTER INSTALLATION PROCESS 48

⚠ SAFETY INFORMATION

Children

Tragic accidents can occur if the operator is not alert to the presence of children. Children are generally attracted to machines and the work being done. Never assume children will remain where you last saw them

1. Keep children out of the operating area and under the watchful eye of another responsible adult.
2. Be alert and turn machine off if children enter the work area.
3. Before and when backing, look behind for small children.
4. Never carry children while operating the machine. They may fall off and be seriously injured or interfere with the safe operation of the machine.
5. Never allow children to play on the machine or attachment even when the machine is turned off.
6. Never allow children to operate the machine even under adult supervision.
7. Use extra care when approaching blind corners, shrubs, trees, or other obstructions that might hide children from sight.

Before Operation

1. Read and understand both this manual AND equipment operator's manual. Know how to operate all controls and how to stop the unit and disengage the controls quickly. Lack of knowledge can lead to accidents.
2. Park the machine/equipment on level ground, set the parking brake, lower the equipment to the ground, place all control levers in neutral, shut off the engine and remove the ignition key and allow the rotating parts to stop BEFORE making any equipment adjustments, repairs or inspections.
3. Keep clear of all rotating parts. Do not put hands or feet under, or into equipment and subframe with engine running.
4. For your safety, do not work under any hydraulically supported machine elements, they may creep down, suddenly drop or be accidentally lowered. Do not use loader, quick hitch, or an implement as a jack for servicing.
5. Do not operate an equipment that is defective or has missing parts. Make sure that all recommended maintenance procedures are completed before operating the unit.
6. Keep the machine/equipment clean. Snow, dirt or ice build-up can lead to malfunction or personal injury. Inspect and clean every rotating parts.
7. Do not modify or alter this equipment or any of its components, or any equipment function without first consulting your dealer. The manufacturer will not claim responsibility for fitment of unapproved parts and/or accessories and any damages as a result of their use.
8. Never use equipment without verifying that that all equipment safety protective devices are in place. Shields, guards and covers must be correctly installed at all times. When necessary to remove these for servicing, cleaning, or repair work, they must be reinstalled immediately.
9. Always make sure all equipment components are properly installed and securely fastened.
10. Check that all machine/equipment drivelines are in good working order.
11. Check for moving parts excessive wear regularly. ALWAYS USE GENUINE PARTS WHEN REPLACEMENT PARTS ARE REQUIRED.
12. Prior to operation, clear work area and mark all curbs, pipes, etc. that cannot be moved.
13. Inspect the machine/equipment after striking any foreign object to assure that all machine/equipment parts are safe and secure and not damaged.
14. Handle fuel with care, as it is highly flammable. Use approved fuel container.
15. Never add fuel to a running engine or a hot engine.
16. Fill fuel tank outdoors with extreme care. Never fill fuel tank indoors. Replace fuel cap securely and wipe up spilled fuel. Always refuel using properly grounded system.

17. Check all machine controls regularly and adjust where necessary. Make sure that the brakes are evenly adjusted. Periodically check all nuts and bolts for tightness, especially wheel hub and rim nuts.

18. Make sure the machine is counterweighted and has tire chains for better traction and stability as recommended by your dealer. Weights provide the necessary balance to improve stability, traction and steering. Use only those recommended by your dealer.

19. Prolonged exposure to loud noise can cause impairment or loss of hearing. Wear a suitable hearing protective device such as earmuffs or earplugs to protect against objectionable or uncomfortable noises.

During Operation

1. Never allow anyone to operate the machine/equipmen until they have read the manuals completely and are thoroughly familiar with their basic operation. Lack of operating knowledge can lead to accidents.

2. Do not allow anyone to ride on the machine/equipment at any time. The only one allowed is the operator that MUST sit in the driver seat.

3. Never allow anyone near the work area. The debris that can be thrown could cause serious personal injuries.

4. Never stand alongside of the macjine/equipment while the engine is running.

5. Never operate the implement without safety protective devices in place. All machine/equipment shields, guards and covers must be correctly installed at all times.

6. Keep clear of all rotating parts. Do not put hands or feet under, or into the equipment with engine running.

7. If the equipment starts to vibrate abnormally, disengage the PTO, stop the engine immediately and check for cause. Excessive vibration is generally a sign of trouble.

8. Park the machine/equipment on level ground, place the transmission in neutral, set the parking brake, disengage the driving system, lower the equipment to the ground, place all levers including auxiliary control levers in neutral, shut off the engine and remove the ignition key BEFORE LEAVING THE MACHINE.

9. Always drive the machine at speeds compatible with safety, especially when operating over rough ground, crossing ditches, slippery surface or when turning.

10. Operate only with good visibility and during daylight hours, or when the area is well lit with bright artificial light.

11. Do not run the engine indoors except when starting engine and transporting attachment in or out of building. Carbon monoxide gas is colorless, odorless and deadly.

12. Exercise extreme caution when operating on or crossing a gravel drive, walks, or roads. Stay alert for hidden hazards or traffic.

13. Operate the machine from top to bottom (not sideways) on moderate slopes. Avoid sudden starts and stops. On steeper slopes, back up the machine with the equipment stopped. Then operate the equipment as you descend the slope.

14. Use extra caution when backing up.

15. Never park the machine on a steep slope. Do not attempt to operate on steep slopes. If operating on slopes is necessary, exercise extreme caution when changing direction.

16. Disengage power to implement when transporting or when not in use.

GENERAL SAFETY INFORMATION

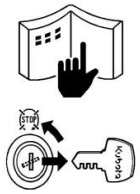

BEFORE YOU START SERVICE

- Read all instructions and safety instructions in this manual and on your machine safety decals.
- Clean the work area and machine.
- Park the machine on a stable and level ground, and set the parking brake.
- Lower the implement to the ground.
- Stop the engine, then remove the key.
- Disconnect the battery negative cable.
- Hang a **"DO NOT OPERATE"** tag in the operator station.

No Smoking or Open Flames while Fueling

- Fuel is extremely flammable and dangerous. Never smoke near fuel. If fuel is spilled on the machine, its engine, or electrical parts, it may cause a fire. If fuel is spilled, wipe it all up immediately.
- Never smoke while filling the machine with fuel. And always tighten the fuel cap securely and wipe up any spilled fuel.

- When performing maintenance on the equipment, hang the DO NOT OPERATE sign where it will be obvious from and around the driver's seat.
- When performing maintenance or repairs, always lower attachments to the ground, stop the engine and secure the tracks with blocks.
- When performing maintenance on the equipment, always disconnect the negative battery cable.
- Before using tools, make sure you understand how to use them correctly and use tools in good condition and of the right size for the job.

- Before getting on/off of the machine, clean off around the steps so there is no mud on them. Always give yourself 3-point support when getting on/off the machine.

CAUTION

- **3-point support means using both legs and one hand or both hands and one leg as you climb up/down.**

START SAFELY

- Do not do the procedures below when you start the engine.
  - short across starter terminals
  - bypass the safety start switch
- Do not alter or remove any part of machine safety system.
- Before you start the engine, make sure that all shift levers are in neutral positions or in disengaged positions.
- Do not start the engine when you stay on the ground. Start the engine only from operator's seat.

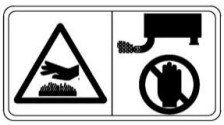

- Do not remove the radiator cap when the engine operates, or immediately after it stops. If not, hot water can spout out from the radiator. Only remove the radiator cap when it is at a sufficiently low temperature to touch with bare hands. Slowly loosen the cap to release the pressure before you remove it fully.

Starting the Machine Safely

- Before starting the engine, always sit in the driver's seat and make sure the area is safe and clear.
- As it is dangerous, never start the engine from anywhere but the driver's seat.
- Always check and make sure control lever(s) are not engaged before starting the engine.
- Never start the engine by hot-wiring the starter circuit. This is not only dangerous, but may damage the machine.

- The engine, muffler, radiator, hydraulic line, etc., have parts that remain very hot even after the engine has been stopped. Be sure to avoid these parts, as touching them can result in burns. Radiator coolant, hydraulic fluid and oil also remain hot. Therefore, do not attempt to remove caps and plugs, etc., before these fluids have sufficiently cooled.
- Make sure the coolant temperature has dropped sufficiently before opening the radiator cap. Also, since the inside of the radiator is pressurized, when removing the cap, first loosen it to release the pressure before removing the cap completely.

- Wear clothes appropriate for working on equipment. Do not wear loose-fitting clothes as they may catch on the machine controls.
- When working on the equipment, use all safety gear, such as a helmet, safety glasses and shoes, that are required by law or regulation.
- Never perform maintenance while drowsy or under the influence of alcohol or drugs.

- Grease is under high pressure inside the hydraulic cylinder. It is very dangerous to loosen a grease nipple quickly as it may shoot off. Always loosen grease nipples slowly.
- And never face a grease nipple while loosening it.

Be Ready for an Emergency

- Keep a first-aid kit and fire extinguisher close at hand so you can use it when needed.
- Keep emergency contact information for doctors, hospitals and ERs handy.

PREVENT A FIRE

- Fuel is very flammable and explosive under some conditions. Do not smoke or let flames or sparks in your work area.
- To prevent sparks from an accidental short circuit, always disconnect the battery negative cable first and connect it last.
- The battery gas can cause an explosion. Keep the sparks and open flame away from the top of battery, especially when you charge the battery.
- Make sure that you do not spill fuel on the engine.

KEEP A GOOD AIRFLOW IN THE WORK AREA

- If the engine is in operation, make sure that the area has good airflow. Do not operate the engine in a closed area. The exhaust gas contains poisonous carbon monoxide.

Dispose of Waste Fluids Properly

- Never dispose of waste fluids on the ground, in the gutter, a river, pond or lake. Always dispose of hazardous substances like waste oil, coolant and electrolytic fluid in accordance with the relevant environmental protection regulations.
- Keep the safety plates clean so they can be read. If a safety plate is damaged and comes off or becomes illegible, put a plate with the same warnings back in its place.

GENERAL SAFETY INFORMATION

<table>
<tr>
<td rowspan="2">
 </td>
<td>

- The pressure in the hydraulic circuit stays at pressure even after the engine stops. Before removing parts, such as hydraulic devices from the machine, first release the pressure. Please note that when releasing residual pressure, the machine itself and/or implements may move without warning, so be very careful when releasing the pressure.
- Oil gushing out under pressure is extremely dangerous as it may pierce your skin or your eyes. Similarly, oil leaking out of pinholes is not visible. So when checking for oil leaks, always wear safety glasses and gloves and use a piece of cardboard or a wood block to shield yourself from oil.

</td>
<td rowspan="2"> 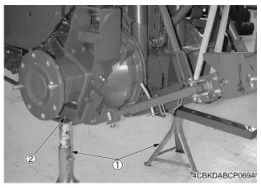
</td>
<td>

- When you need to access the underside of the machine for maintenance purposes, but sure to support the machine with a safety stand. Getting under the machine while supporting the machine by machine's own hydraulic cylinder or using a hydraulic jack can be extremely dangerous in the event of a hydraulic fluid leakage or similar mishap.

(1) Safety stand
(2) Secure point for safety stand

</td>
</tr>
<tr>
<td>

- Do not open a fuel system under high pressure. The fluid under high pressure that stays in fuel lines can cause serious injury. Do not disconnect or repair the fuel lines, sensors, or any other components between the fuel pump and injectors on engines with a common rail fuel system under high pressure.
- Put on an applicable ear protective device (earmuffs or earplugs) to prevent injury against loud noises.
- Be careful about electric shock. The engine generates a high voltage of more than DC100 V in the ECU and is applied to the injector.

</td>
<td>

- Whenever it is necessary to open the engine covers or hood in order to service the machine, always prop them open.
- If it is absolutely necessary to run the engine while working on the machine, make sure you are clear of all rotating or moving parts. Also take care not to leave anything, such as tools or rags, near any moving parts.

</td>
</tr>
<tr>
<td> </td>
<td>

- Engage the loader control valve lock to prevent accidental actuation when the implement is not in use or during transport. Do not utilize the valve lock for machine maintenance or repair.
- Do not perform machine maintenance with loader in the air. If possible, follow loader instructions to remove loader before performing maintenance.
- If the machine has a backhoe, engage swing and boom locks.

</td>
<td></td>
<td></td>
</tr>
</table>

ESTIMATED ASSEMBLY TIME

Refer to the following table for the estimated assembly time to open the package and assemble the equipment.

	4-POINT HITCH	DRIVE SYSTEM
Estimated initial installation time	40-50 min	25-35 min
Reinstallation (on the tractor)	2-4 min	5-10 min

The assembly times of the table are only a reference under normal conditions according to the following assumptions:

1. The assembly is done by a competent person who is familiar with the equipment.

2. The following tools and materials are prepared:

   1) Tools:
   - Wrench set (flat wrenches)
   - Ratchet & socket set
   - Allen key set
   - Cutting pliers
   - Security gloves
   - Safety glasses

   2) Material:
   - Thread locker (Loctite #243)
   - Thread sealant (Teflon tape)

ASSEMBLY

ASSEMBLY OF 4 POINT HITCH & SUBFRAME

Before assembly, separate all hardware according to size. When the assembly is complete, tighten all the bolts by referring to the "Torque Specification Table" located at the end of the manual.

Preparation

Remove the lawnmower and the front loader from the tractor if installed by following the instruction in the tractor's operator's manual.

IMPORTANT: The front loader and subframe should never be installed simultaneously on the tractor.

WARNING: To avoid serious personal injury or death: Read and understand the SAFETY INFORMATION on the previous pages before installation and operation Perform all the assembly with unit properly locked and supported.

WARNING: To avoid serious personal injury or death: Park the tractor on level ground, place the transmission in neutral, set the parking brake, disengage the drive system, put all levers to neutral, shut off the engine, remove the ignition key and wait for all movement to stop BEFORE starting installation.

ASSEMBLY

Installation of the Supports

1. Gather items 2 to 11 listed in the table of figure 1.
2. **Figure 1:** Insert the left support (item 2) inside and underneath the tractor frame (item 1) and attach without tightening with two hex bolts. M12 x 1.75 x 40mm (item 4), four 12mm flat washers (item 7), two 12mm lockwashers (item 6) and two M12 x 1.75 nylon insert lock nuts (item 5).
3. **Figure 2:** Attach without tightening the left support (item 2) with two hex bolts M12 x 1.75 x 55mm (item 8), four 12mm flat washers (item 7), two 12mm lockwashers (item 6) and two nylon insert lock nuts M12 x 1.75 (item 5).
4. **Figure 1:** Proceed in the same way to attach the right support (item 3).
5. **Figure 1:** Insert the ø1" x 13 3/4" lg. pin (item 9) inside the supports (items 2-3) and secure with two 1/4"NC x 1 1/2" lg. hex bolts (item 10) and two 1/4"NC nylon insert hex nuts (item 11).

   Note: The supports (items 2-3) are compatible with the front loader and lawnmower and can remain permanently on the tractor.

Figure 1

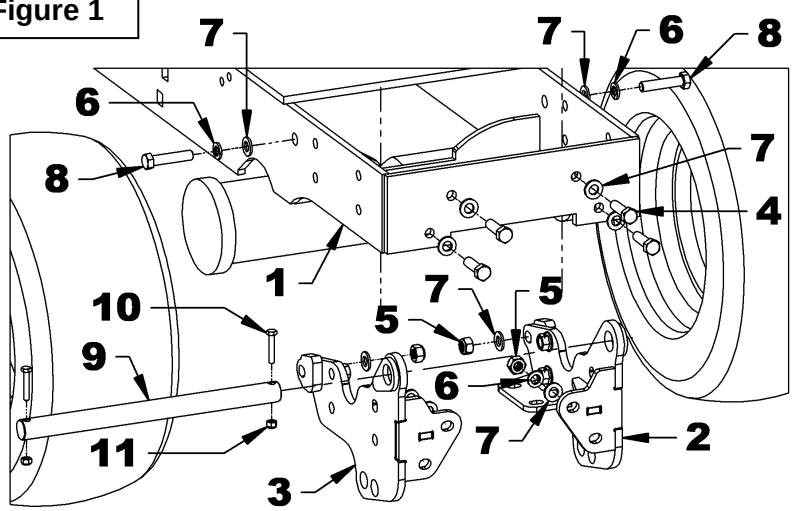

N°	DESCRIPTION	QTY
1	Tractor	1
2	Left support	1
3	Right support	1
4	Hex bolt M12 x 1.75 x 40mm, Gr.8.8, PTD	4
5	Nylon insert lock nut M12 x 1.75 PTD	6
6	Lockwasher ø12mm, PTD	6
7	Flat washer ø12mm, PTD	12
8	Hex bolt M12 x 1.75 x 55mm, Gr.8.8, PTD	2
9	Pin ø1" x 13 3/4" PTD	1
10	Hex bolt 1/4"NC x 1 1/2", PTD	2
11	Nylon insert lock nut 1/4"NC, PTD	2

ASSEMBLY

Installing the Auto Connect Mower Brackets - Supplied with the Mower and the Front Protector – supplied WITH the Front Loader

1. **Gather** items 1 to 10 listed in the table of figure 2.
2. **Figure 2:** Insert a mower support (item 1) between the right support and the tractor frame. Attach without tightening in the second lower hole, an M12 x 1.75 x 55mm hex bolt (item 2a), a ø12mm lockwasher (item 3), a ø12mm flat washer (item 4) and a hose support (item 5).
3. Attach without tightening in the second upper hole, a M12 x 1.75 x 55mm hex bolt (item 2b), a ø12mm lockwasher (item 3), and a ø12mm flat washer (item 4).
4. **Figure 2:** Insert a mower support (item 1) between the left support and the tractor frame. Attach without tightening with two M12 x 1.75 x 55mm hex bolts (item 2c) two ø12mm lockwashers (item 3), two ø12mm flat washers (item 4).
5. **Figure 2:** Attach without tightening the front protector (item 7), the plastic spacers (item 8) and the mower supports (item 1) with four M12 x 1.75 x 75mm hex bolts (item 9), eight 12mm flat washers (item 4), four 12mm lockwashers (item 3) and four M12 x 1.75 nylon insert lock nuts (item 6).
6. **Figure 2**: Insert the ø13/16" x 14 1/8" "L" pin (item 10) through the mower supports (item 1) and the subframe supports.

Figure 2

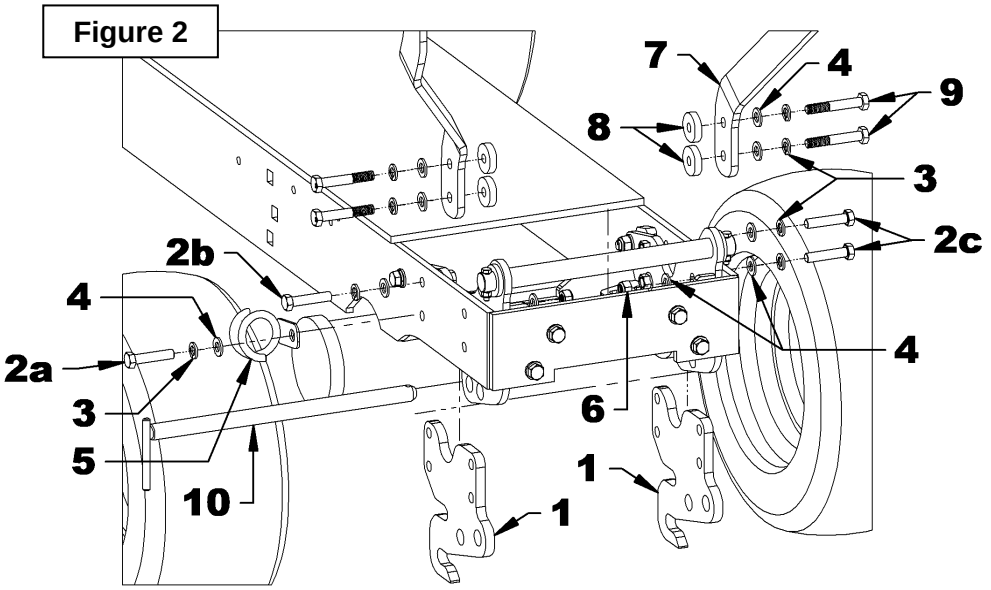

N°	DESCRIPTION	QTY
1	Mower support - supplied with mower	2
2	Hex bolt M12 x 1.75 x 40mm, Gr.8.8, PTD	4
3	Lockwasher ø12mm, PTD	8
4	Flat washer ø12mm, PTD	8
5	Hose support	1
6	Nylon insert lock nut M12 x 1.75 PTD	4
7	Front protector	1
8	Plastic spacer	4
9	Hex bolt M12 x 1.75 x 75mm, Gr.8.8, PTD	4
10	Pin ø13/16" x 14 1/8" PTD	1

ASSEMBLY

Installing the Auto Connect Mower Brackets - Supplied with Mower WITHOUT Front protector -WITHOUT Front loader.

1. Gather items 1 to 7 listed in the table of figure 3.
2. **Figure 3:** Insert a mower support (item 1) between the right support and the tractor frame. Attach without tightening in the second lower hole, an M12 x 1.75 x 55mm hex bolt (item 2a), a ø12mm lockwasher (item 3), a ø12mm flat washer (item 4) and a hose support (item 5).
3. **Figure 3**: Attach without tightening in the second upper hole, an M12 x 1.75 x 55mm hex bolt (item 2b), a ø12mm lockwasher (item 3), a ø12mm flat washer (item 4).
4. **Figure 3:** Insert a mower support (item 1) between the left support and the tractor frame. Attach without tightening with two M12 x 1.75 x 55mm hex bolts (item 2c) two ø12mm lockwashers (item 3), two ø12mm flat washers (item 4).
5. **Figure 3:** Attach without tightening each of the mower brackets (item 1) with two M12 x 1.75 x 55mm hex bolts (item 2d), four 12mm flat washers (item 4), two 12mm lockwashers (item 3) and two nylon insert lock nuts M12 x 1.75 (items 6).
6. **Figure 3:** Insert the ø13/16" x 14 1/8" "L" pin (item 7) through the mower supports and the subframe supports.

Figure 3

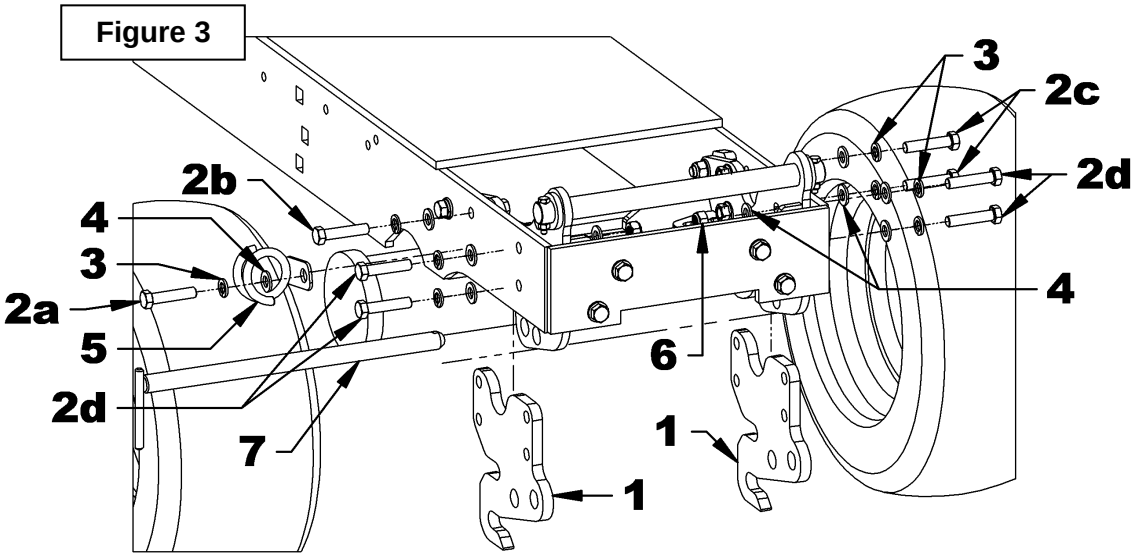

N°	DESCRIPTION	QTY
1	Mower support - supplied with mower	2
2	Hex bolt M12 x 1.75 x 55mm, Gr.8.8, PTD	8
3	Lockwasher ø12mm, PTD	8
4	Flat washer ø12mm, PTD	12
5	Hose support	1
6	Nylon insert lock nut M12 x 1.75 PTD	4
7	Pin ø13/16" x 14 1/8 " PTD	1

ASSEMBLY

Installation of Spacers WITHOUT the front protector - Front loader

1. Gather all the items 1 to 7 listed in the table of figure 4.
2. **Figure 4**: Insert a spacer (item 1) between the right support and the tractor frame. Attach without tightening in the second lower hole, an M12 x 1.75 x 55mm hex bolt (item 2) a ø12mm lockwasher (item 3), a ø12mm flat washer (item 4) and a hose support (item 5).
3. **Figure 4:** Attach without tightening, in the second upper hole, an M12 x 1.75 x 55mm hex bolt (item 2), a ø12mm lockwasher (item 3), and a ø12mm flat washer (item 4).
4. **Figure 4:** Insert a spacer (item 1) between the left support and the tractor frame. Attach without tightening with four M12 x 1.75 x 55mm hex bolts (item 2) four ø12mm lockwashers (item 3), six ø12mm flat washers (item 4) and four M12 x 1.75 nylon insert lock nuts (item 6).
5. **Figure 4:** Insert the ø13/16" x 14 1/8" "L" pin (item 7) through the spacer (item 1) and the subframe supports.

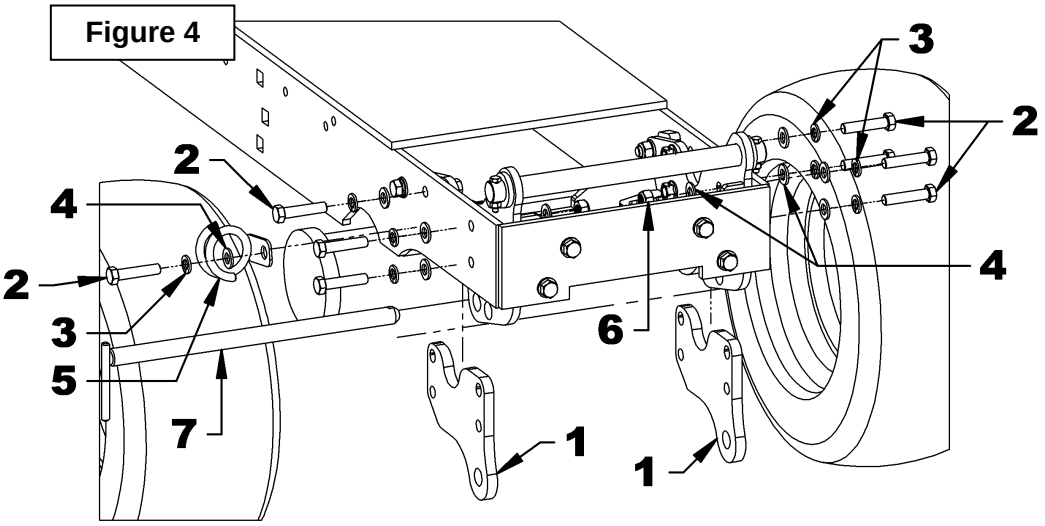

N°	DESCRIPTION	QTY
1	Spacer	2
2	Hex bolt. M12 x 1.75 x 55mm, Gr.8.8, PTD	8
3	Lockwasher ø12mm, PTD	8
4	Flat washer ø12mm, PTD	12
5	Hose Support	1
6	Nylon insert lock nut M12 x 1.75 PTD	4
7	Pin ø13/16" x 14 1/8 " PTD	1

ASSEMBLY

Installation of the Spacers WITH the front protector - Front loader.

1. Gather items 1 to 10 listed in the table of figure 5.
2. **Figure 5**: Insert a spacer (item 1) between the right support and the tractor frame. Attach without tightening in the second lower hole, an M12 x 1.75 x 55mm hex bolt (item 2a) a ø12mm lockwasher (item 3), a ø12mm flat washer (item 4), and a hose support (item 5).
3. **Figure 5**: Attach without tightening in the second upper hole an M12 x 1.75 x 55mm hex bolt (item 2b), a ø12mm lockwasher (item 3), and a ø12mm flat washer (item 4).
4. **Figure 5:** Insert a spacer (item 1) between the left support and the tractor frame. Attach without tightening with two M12 x 1.75 x 55mm hex bolts (item 2c) two ø12mm lockwashers (item 3), two ø12mm flat washers (item 4).
5. **Figure 5:** Attach without tightening with the front protector (item 7), the plastic spacers (item 8) and the mower supports (item 1) with four M12 x 1.75 x 75mm hex bolts (item 9), eight 12mm flat washers (item 4), four 12mm lockwashers (item 3) and four M12 x 1.75 nylon insert lock nuts (item 6).
6. **Figure 5:** Insert the ø13/16" x 14 1/8" "L" pin (item 10) through the spacers (item 1) and the subframe supports.

Figure 5

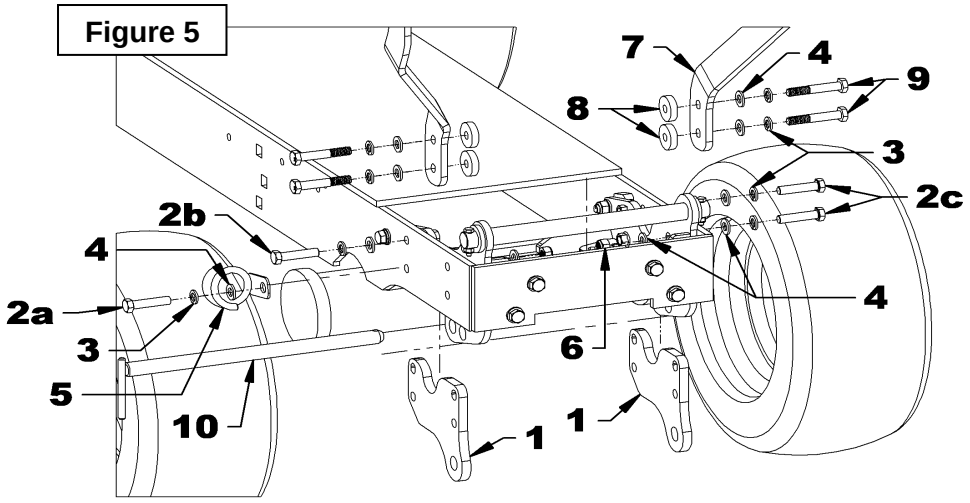

N°	DESCRIPTION	QTY
1	Spacers	2
2	Hex bolt M12 x 1.75 x 55mm, Gr.8.8, PTD	4
3	Lockwasher ø12mm, PTD	8
4	Flat washer ø12mm, PTD	12
5	Hose support	1
6	Nylon insert lock nut M12 x 1.75 PTD	4
7	Front protector	1
8	Plastic spacers	4
9	Hex bolt M12 x 1.75 x 75mm, Gr.8.8, PQE	4
10	Pin ø13/16" x 14 1/8 " PTD	1

ASSEMBLY

Installing the Mower Brackets - supplied with the mower

WITH or WITHOUT the front protector - Front loader.

1. Gather items 1 to 10 listed in the table of figure 6.
2. **Figure 6:** Insert a spacer (item 1) between the right support and the tractor frame and the mower support from the outside of the frame (item 9). Attach without tightening in the second lower hole an M12 x 1.75 x 55mm hex bolt (item 2a), a ø12mm lockwasher (item 3), a ø12mm flat washer (item 4) and a hose support (item 5).
3. **Figure 6:** Attach without tightening in the second upper hole, an M12 x 1.75 x 55mm hex bolt (item 2b), a ø12mm lockwasher (item 3), and a ø12mm flat washer (item 4).
4. **Figure 6:** Insert a spacer (item 1) between the left support and the tractor frame and the mower support from the outside of the frame. Attach without tightening two M12 x 1.75 x 55mm hex bolts (item 2c) two ø12mm lockwashers (item 3), and two ø12mm flat washers (item 4).
5. **Figure 5:** Attach without tightening the front protector (item 7), the spacers (item 1) and the mower supports (item 9) with four M12 x 1.75 x 75mm hex bolts (item 8), eight 12mm flat washers (item 4), four 12mm lockwashers (item 3) and four M12 x 1.75 nylon insert lock nuts (items 6).
6. **Figure 6:** Insert the ø13/16" x 14 1/8" "L" pin (item 10) through the spacers (item 1) and the subframe supports.

Figure 6

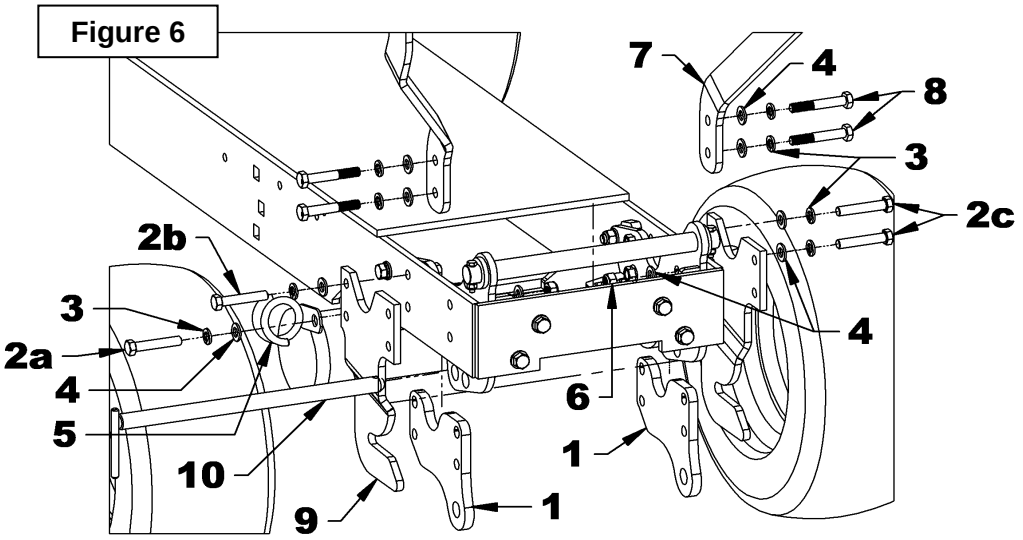

N°	DESCRIPTION	QTY
1	Spacer	2
2	Hex bolt. M12 x 1.75 x 55mm, Gr.8.8, PTD	4
3	Lockwasherø12mm, PTD	8
4	Flat washer ø12mm, PTD	12
5	Hose support	1
6	Nylon insert lock nutM12 x 1.75 PTD	4
7	Front protector	1
8	Hex bolt M12 x 1.75 x 75mm, Gr.8.8, PTD	4
9	Mower support - supplied with mower	2
10	Pin ø13/16" x 14 1/8 " PTD	1

ASSEMBLY

Installing the Support reinforcement

1. Gather the items listed in the table of figure 7.
2. **Figure 7:** Insert the support reinforcement (item 1) between the two supports (item 2) Attach without tightening with four M12 x 1.75 x 35mm hex bolts (item 3), four ø12mm lockwashers (item 4) and four flat washers ø12mm (item 5).

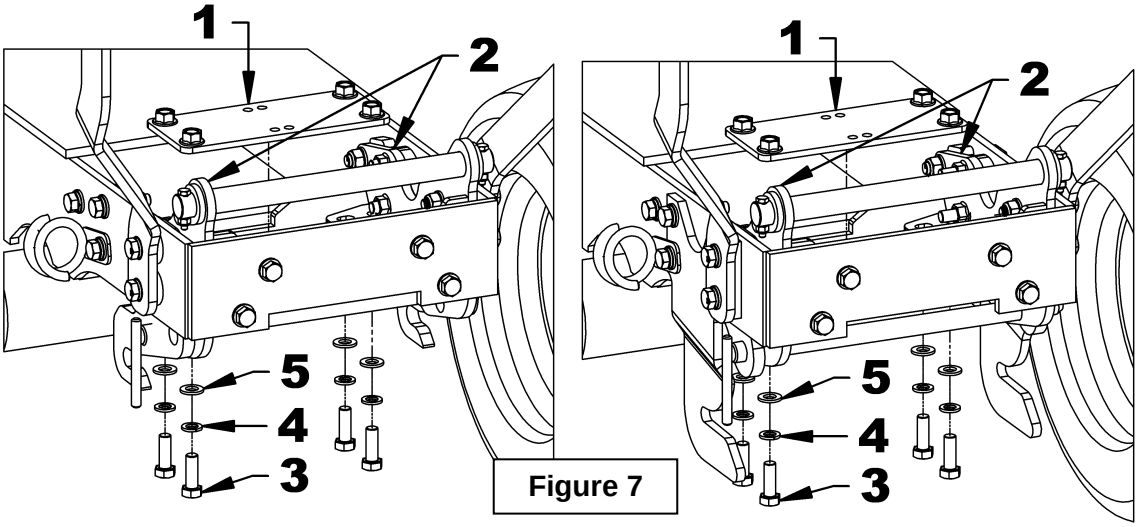

Figure 7

N°	DESCRIPTION	QTY
1	Support reinforcement	1
2	LEFT and RIGHT support	2
3	Hex bolt M12 x 1.75 x 35mm, Gr.8.8, PTD	4
4	Lockwasher ø12mm, PTD	4
5	Flat washer ø12mm, PTD	4

ASSEMBLY

Tightening order

1. **Figure 8**: Lightly tighten the four M12 x 1.75 hex bolts (item 1) on the front of the tractor frame to support the supports on the back of the tractor bumper.
2. **Figure 8:** Lightly tighten the five M12 x 1.75 hex bolts (item 2) on each side of the tractor frame in order to support the brackets on the sides of the tractor frame. Refer to the next step for the position of the hose support at an upwards angle of 10 °.
3. **Figure 8:** Tighten all the M12 x 1.75 hex bolts (item 1 and 2) to a tightening torque of 67 lb-ft (91 N-m).
4. **Figure 8:** Tighten all the M12 x 1.75 hex bolts (item 3) to a tightening torque of 67 lb-ft (91 N-m).

Figure 8

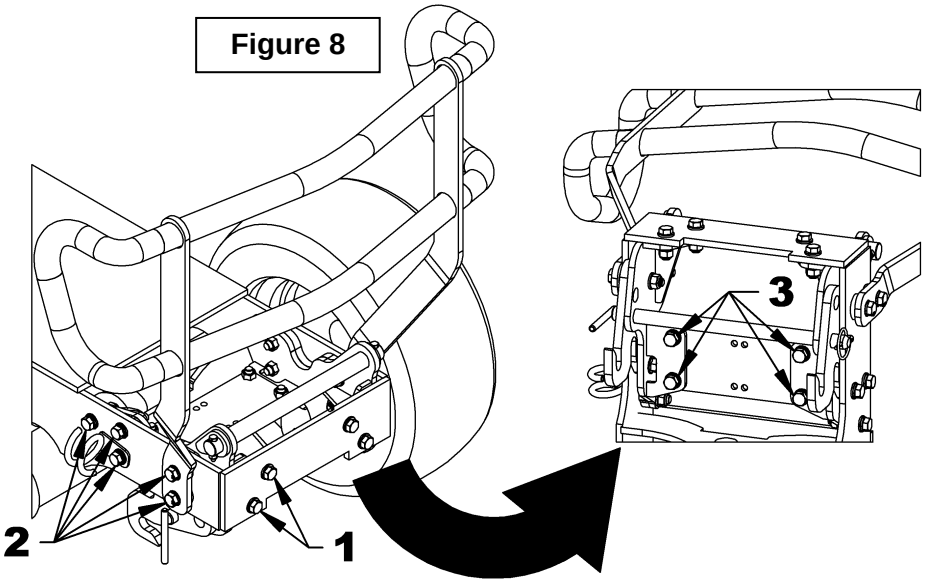

Installation of the hose support

1. **Figure 9:** Install the hose support (item 3) with a ø3/8"NC x 1 1/4" hex bolt (item 1), two ø3/8" flat washers (item 2), a ø3/8" lockwasher (item 4) and a ø3/8"NC hex nut (item 5). Position the hose support at an upwards angle of 15°.

N°	DESCRIPTION	QTY
1	Hex bolt ø3/8"NC x 1 1/4" Gr.5 PTD	1
2	Flat washer ø3/8" PTD	2
3	Hose support	1
4	Lockwasher ø3/8" PTD	1
5	Hex nut ø3/8"NC PTD	4

Figure 9

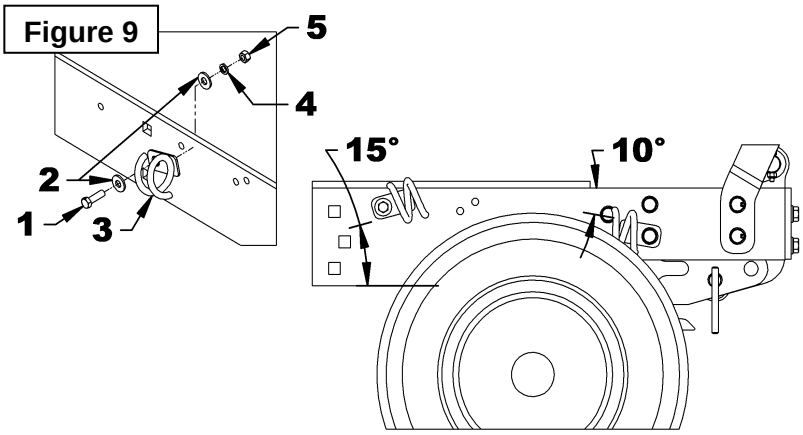

ASSEMBLY

Assembly of the Male Quick Hitch to the subframe

1. Gather all items 1 to 6 listed in the table in figures 10, 10a and 10b.
2. **Figure 10:** Screw the two 1/4"NF grease fittings (item 6) to the subframe (item 1).
3. **Figure 10a:** Secure the male hitch (item 2) to the subframe (item 1) with the ø1"x 13 3/4" lg pin (item 3), two 1/4"NC x 2" lg. hex bolts (item 4), and 1/4" nylon insert lock nuts (item 5).

IMPORTANT: To avoid interference with the mower brackets (items 2-3, figure 4), the two 1/4"NC x 2" lg hex bolts. (item 4) must be inserted into the bushings of the male hitch (item 2) from the rear of the subframe (item 1) as shown on figures 10a and 10b.

N°	DESCRIPTION	QTY
1	Subframe	1
2	Male quick hitch	1
3	Pin ø1" x 13 3/4" LG., PTD	1
4	Hex bolt 1/4"NC x 2" LG., PTD	1
5	Nylon insert lock nut 1/4"NC PTD	1
6	Grease fitting 1/4"NF	2

Figure 10

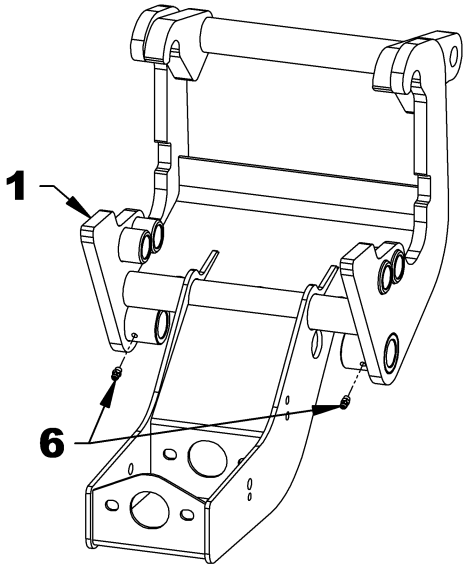

Figure 10a

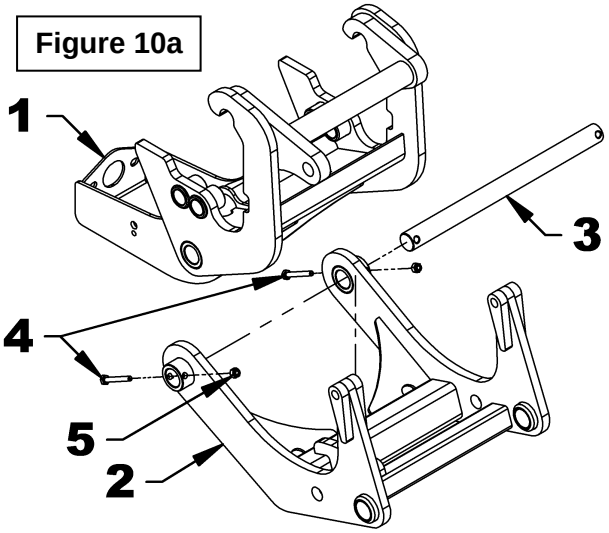

Figure 10b

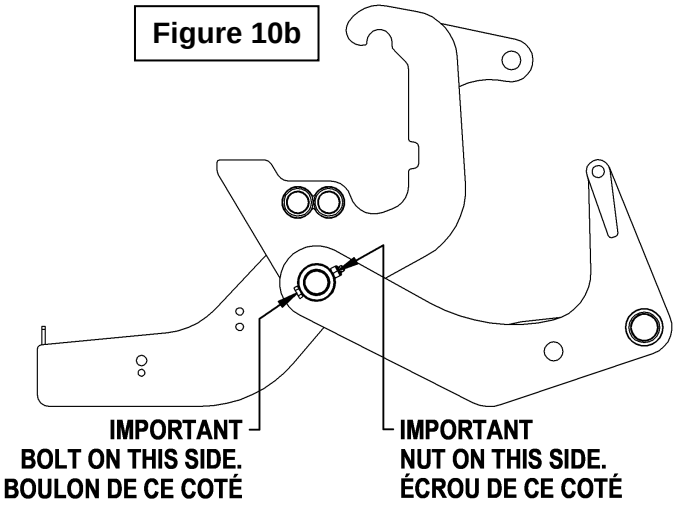

ASSEMBLY

Installation of the Hydraulic Cylinder

1. Gather all items 1 to 5 listed in the table in figure 11.
2. **Figure 11:** Apply grease to the ø3/4" x 2 1/2" lg pin (item 6a) and attach the fixed section of the hydraulic cylinder (item 5) to the subframe support (item 1) with the pin (item 6a) and two ø3/16" x 1 1/2" lg cotter pins (item 6b) supplied with the cylinder.

IMPORTANT: The cylinder ports must be placed as shown on figure 11.

3. **Figure 11**: Remove and discard the ø3/4"x 2 1/2" lg pin and the two ø3/16" x 1 1/2" lg cotter pins from the rod section of the hydraulic cylinder (item 5). Apply grease to the ø3/4" x 3 1/2" lg pin (item 4) and secure the cylinder to the support of the male quick hitch (item 2) with the ø3/4" x 3 1/2" lg pin (item 4) and two ø3/16" x 1 1/2" lg cotter pins (item 3).

Figure 11

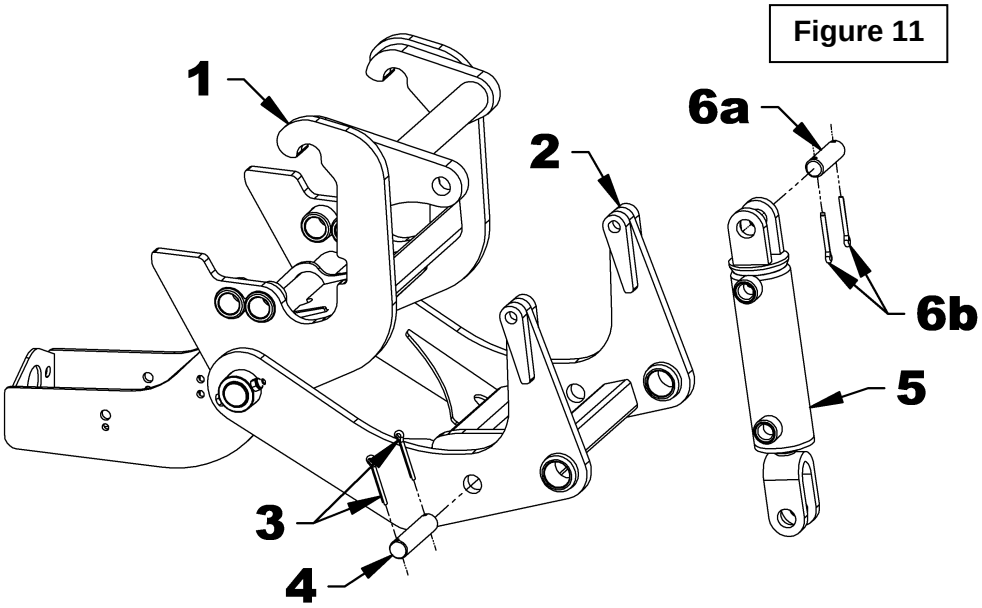

N°	DESCRIPTION	QTY
1	Sub frame	1
2	Male quick hitch	1
3	Cotter pin ø3/16" x 1 1/2"	2
4	Pin ø3/4" x 3 1/2" LG., PTD	2
5	Hydraulic cylinder 2" x 5"	1
6a	Pin ø3/4" x 2 1/2" LG (included with cylinder)	N/A
6b	Cotter pin ø3/16" x 1 1/2" LG (included with cylinder)	N/A

ASSEMBLY

Installation of the Output Shaft

1. Gather all items 1 to 13 listed in the table in figure 12.
2. **Figures 12-12a**: Make sure that the side plates of the subframe are clean and stick the two "DANGER" decals #799 (item 7) in the places indicated on figures 12 and 12a.
3. **Figure 12:** Secure, by lightly tightening, the two flange bearings (item 8) to the subframe (item 2) with four 3/8"NC x 1 1/2" lg hex bolts, 3/8" lockwashers and 3/8"NC hex nuts (items 3, 6 and 5).

Note: Make sure that the grease fittings of the flange bearings are positioned as shown in figure 9.

4. **Figure 12:** Temporarily remove the four Allen set screws (item 8a) from the two flange bearings (item 8) and insert the ø1" x 14 7/8" lg output shaft (item 9) in the rear flange bearing (item 8), in the 1 1/4" x 5/8" lg square bar (item 1) and in the front flange bearing (item 8).
5. **Figure 12a:** Place the end of the output shaft with the long grooves (item 9) at 5 15/16" of the rear flange bearing (item 8) as shown on Figure 12a.
6. **Figure 12:** Apply thread adhesive (Loctite # 243) in the threaded holes of the flange bearings (item 8) and on the threads of the four 1/4"NC x 1/4" lg Allen set screws (item 8a) and screw firmly on the two flange bearings (item 8).

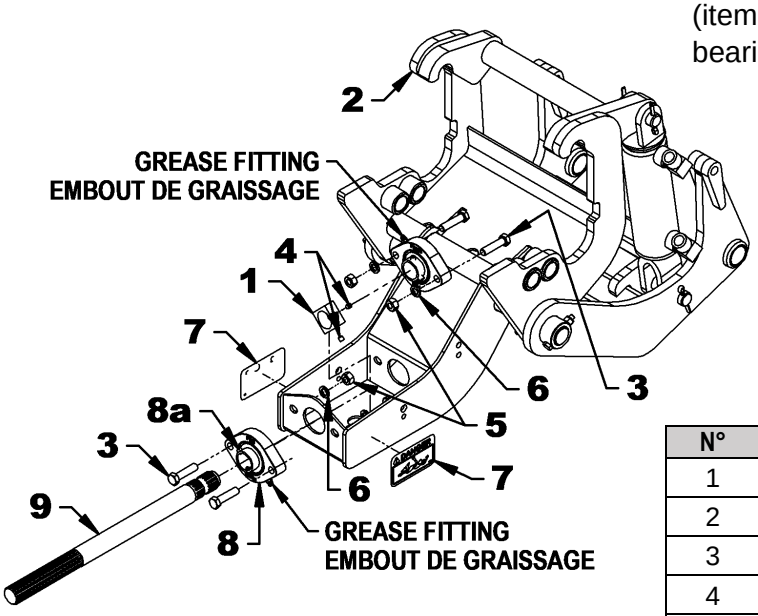

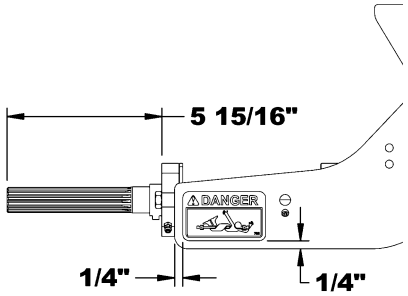

N°	DESCRIPTION	QTY
1	Square bar 1 1/4" PTD	1
2	Subframe	1
3	Hex bolt ø3/8"NC x 1 1/2" LG	4
4	Allen set screws 1/4"NF x 1/4" LG	2
5	Hex nut 3/8"NC PTD	4
6	Lockwasher ø3/8" PQE	4
7	Decal "DANGER" #799	2
8	Flange bearing s ø1"	2
8a	Allen set screws ø1/4"NF x 1/4" LG	4
9	Output shaft ø1" x 14 7/8" LG	1
10	Rotation captor **NOT-INCLUDED #TA11587**	1
11	Hex bolt 1/4"NC x 3/4" LG., PTD	1
12	Nylon insert lock nut 1/4"NC PTD	1
13	Flat washer ø1 1/2" PTD	1
N/A	Thread adhesive (LOCTITE #243) **NOT-INCLUDED**	---

ASSEMBLY

7. **Figures 12b:** Secure the rotation sensor **not included** (item 10) to the subframe (item 2) with the 1/4"NC x 3/4" lg hex bolt (item 11) and the 1/4"NC nylon insert lock nut (item 12).

8. **Figures 12 and 12b:** Place the square bar (item 1) opposite the rotation sensor (item 10). Apply thread adhesive (loctite # 243) in the threaded holes of the square bar (item 1) and on the threads of the two Allen set screws (item 4) and screw firmly on the square bar (item 1).

9. **Figure 12b and 12c:** Place the ø1 1/2" flat washer (item 13) between the rotation sensor (item 10) and one edge of the square bar (item 1). Turn the output shaft (item 9) and adjust it by moving it sideways (see figure 12c) so that the space between the square bar (item 1) and the rotation sensor (item 10) is at a distance corresponding to the thickness of the ø1 1/2" flat washer (item 13). **IMPORTANT: Make sure there is no contact between the rotation sensor (item 10) and the square bar (item 1).**

10. **Figures 12:** Tighten the four 3/8"NC x 1 1/2" lg hex bolts. (item 3) torque at 31 lb-ft (42 N m).

    Note: Keep the ø1 1/2" flat washer (item 13) in case new adjustments are necessary.

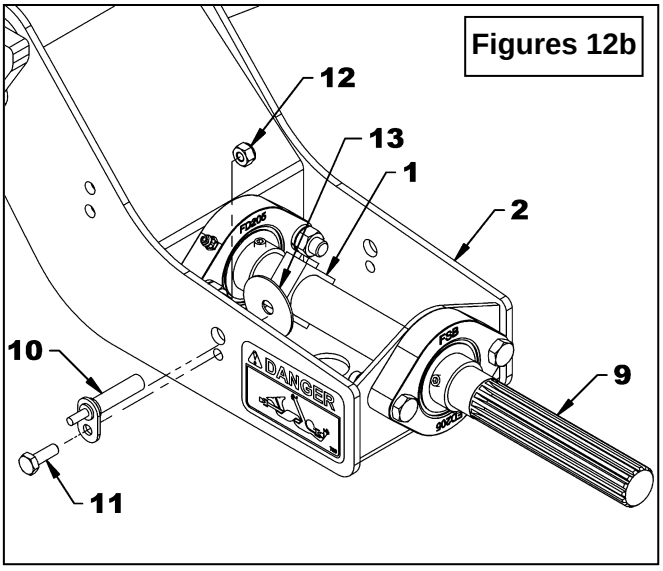

Figures 12b

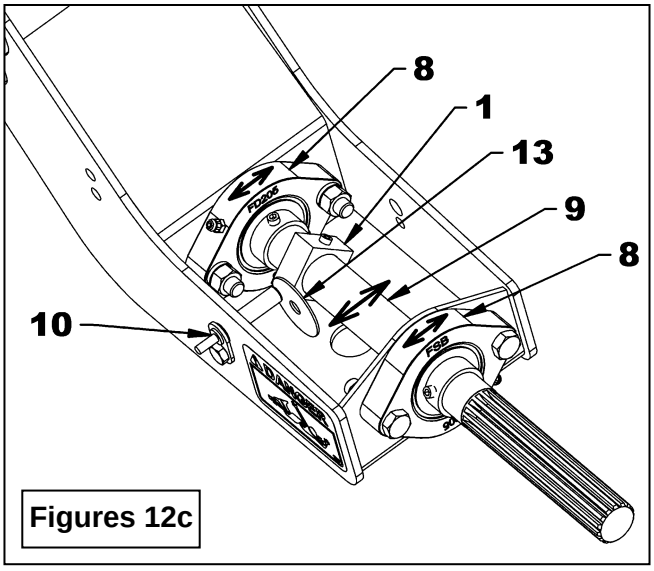

Figures 12c

ASSEMBLY

Installation of the Assembled Subframe on the Tractor

1. Gather all items 1 to 6 listed in the table in figure 13.
2. **Figure 13:** Place the assembled subframe (item 3) in front of the tractor so that the hooks of the subframe (item 3a) are approximately 6" from the front of the tractor.
3. **Figure 13:** Position yourself facing the subframe (item 3) and place your hands under the tube of the subframe (item 3b). Lift and place the hooks of the subframe (item 3a) on the ø1" pin (item 4) which is assembled on the front of the tractor.
4. **Figure 13:** Secure the subframe (item 3) to the supports (items 5 and 6) with the ø13/16" x 14 1/8" "L" pin (item 1) and the ø3/16" linchpin (item 2).

Figure 13

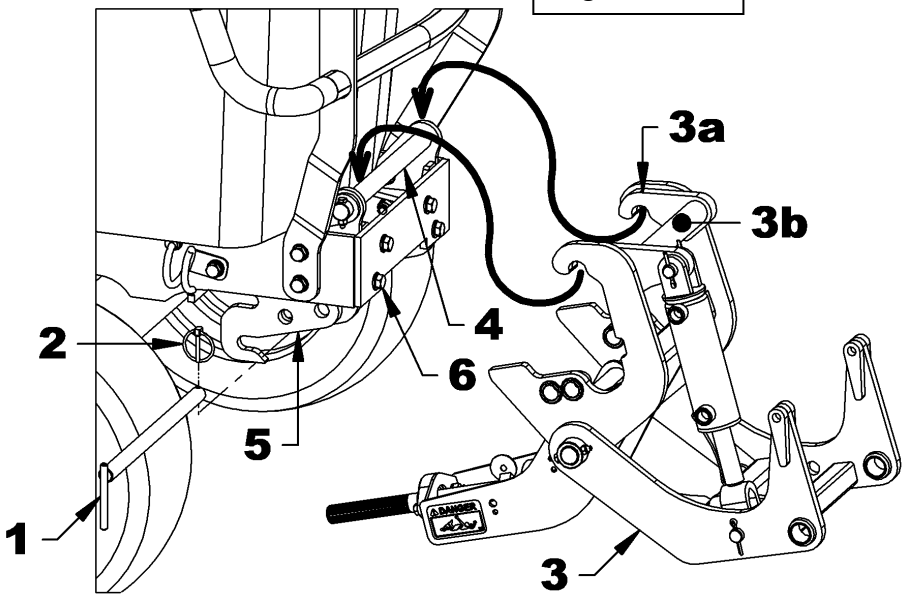

N°	DESCRIPTION	QTY
1	"L" Pin ø13/16" x 14 1/8" lg.	1
2	Linchpin ø3/16" lg.	1
3	Subframe and male quick hitch assembled	1
4	Pin ø1" x 13 3/4" lg	1
5	Right support	1
6	Left support	1

ASSEMBLY

Installation of the Hydraulic Components

1. Gather all items 1 to 8 listed in the table in figure 14.

IMPORTANT: For detailed assembly of hydraulic components, refer to the adapter installation procedure at the end of the operator's manual.

2. **Figure 14 and 14a**: Apply thread sealant (Teflon tape) to the male threads of the two 3/8"NPT male x 3/8"NPT female 90 ° elbows, (item 4) and screw on the ports of the hydraulic 2" x 5" cylinder (items 8a and 8b) by positioning the elbows as shown on figure 14a.
3. **Figure 14:** Apply thread sealant (Teflon tape) to the 3/8"NPT male threads of the two 1/4" x 53" lg hydraulic hoses (item 2) and screw the two hoses (item 2) on the two elbows (item 4) fixed to the cylinder (item 8).
4. **Figure 14:** Fix the two 90° 1/4"NPT M/Sw. F elbows (item 3) on the two hydraulic hoses (item 2).
5. **Figure 14:** Apply thread sealant (Teflon tape) to the 1/4"NPT male threads of the two 90° 1/4" NPT M / Sw. F elbows (item 3), insert the blue and red rings (items 6a and 7a), the dust caps (item 1) and screw the two male 1/4"NPT quick couplers (item 5). The blue colored ring must be associated with the lower hydraulic supply port of the cylinder (item 8a) and the red ring must be associated with the upper port of cylinder (item 8b).

Figure 14

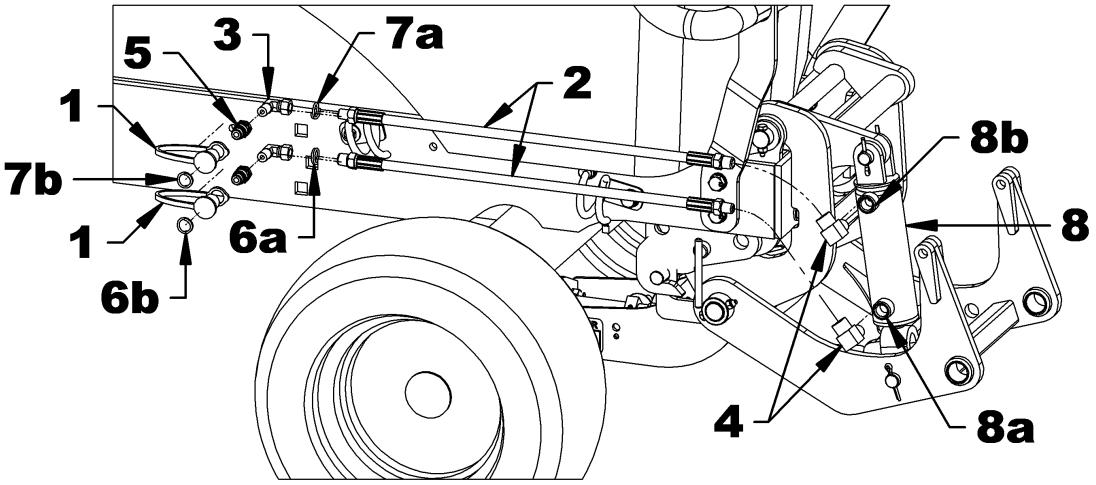

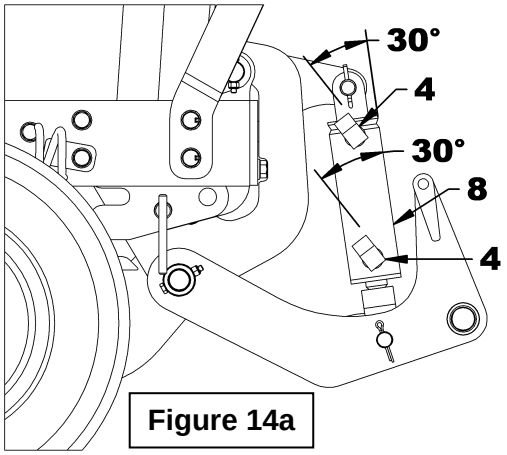

Figure 14a

N°	DESCRIPTION	QTY
1	Dust cap ø1/4"	2
2	Hydraulic hose ø1/4" x 53" LG.	2
3	90° Elbow, 1/4"NPT Sw. F.	2
4	90° Elbow, 3/8" NPT M x 3/8" NPT F	2
5	Male quick coupler 1/4"NPT	2
6	Identification ring BLUE	2
7	Identification ring RED	2
8	Hydraulic cylinder ø2" x 5"	1
N/A	Thread sealant Teflon tape **NOT INCLUDED**	---

ASSEMBLY

Installation of the Hydraulic Hoses on the Tractor

1. Gather all items listed in the table on figure 15.
2. **Figure 15:** Insert the hoses (items 1 and 2) in the two hose supports (item 3). Connect the hose from the upper cylinder port (item 2) to the lower outer coupler of the tractor valve and the lower cylinder hose (item 1) to the upper outer coupler of the valve as shown on the figure 15.

IMPORTANT: Make sure the hydraulic couplings are clean before connecting them.

3. **Figure 15a:** Insert the blue colored rings (item 4) and the red colored rings (item 5) in the places indicated on figure 15a.
4. **Figure 15a:** Secure the two hydraulic hoses with two 8" lg. x 4.8mm nylon tie wraps (item 6) at the locations shown on the figure and cut off the excess material.

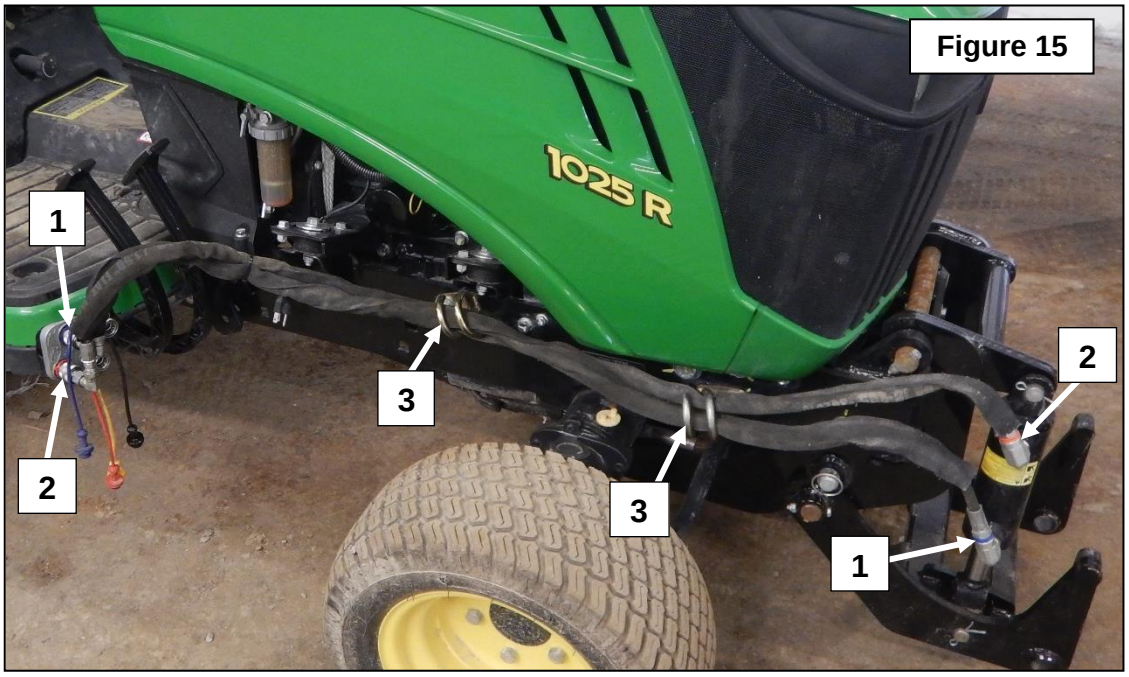

Figure 15

N°	DESCRIPTION	QTY
1-2	Hydraulic hose	2
3	Hose support	2
4	Identidication ring BLUE	2
5	Identification ring RED	2
6	Nylon tie wrap 8" LG. x 4.8mm	2

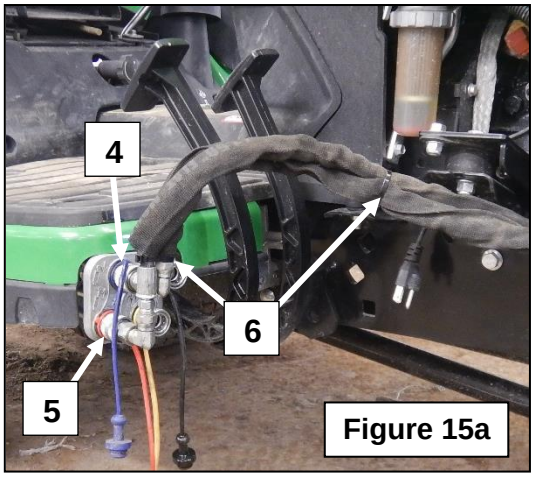

Figure 15a

ASSEMBLY

Installation of the Driveline

1. **Figure 16:** After completing the installation of the subframe on the tractor attach the longest yoke of the fixed driveline (item 1a) to the tractor's output shaft (item 2).
2. **Figure 16:** Disengage the locking collar (item 1) by pulling it back and push on the yoke (item 1d) to connect the driveline to the tractor PTO (item 3). Release the yoke and make sure the locking collar is back in its proper position. Pull and push on driveline to make sure it is securely locked.

WARNING : To avoid serious injury or death: Make sure that the quick connect yoke is securely locked in place. A "click" must be heard.

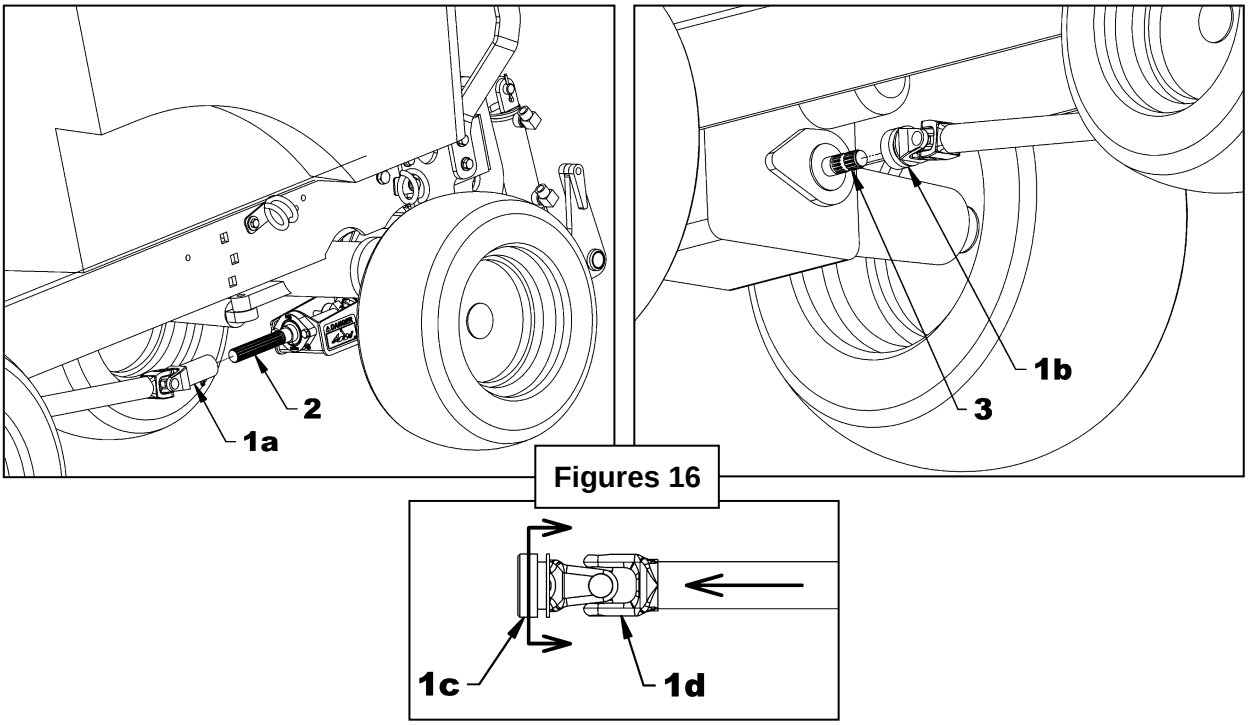

Figures 16

OPERATION

GENERAL PREPARATION

1. Make sure the equipment driveline is properly secured
2. Make sure the equipment is operating freely.

WARNING: To avoid serious injurious or death:

- **Never allow anyone near the work area.**
- **Never allow anyone to climb on the equipment or the subframe.**
- **Before cleaning, adjusting or repairing the equipment or subframe, immobilize the tractor, wait for the complete stop of the moving parts, set the parking brake, lower the equipment to the ground, shut off the engine and remove the ignition key.**
- **Never place any part of your body under the equipment when making adjustments.**

WARNING
Always operate the equipment from the tractor seat.

WARNING
Operate the equipment at a speed that corresponds to the work area conditions. Be careful when working near a slope or on uneven ground.

WARNING
Always wear safety glasses when operating the equipment.

OPERATION

Note: The rotation sensor must be installed to be able to back up the tractor when in operation with the snowblower.

Controls

- The front loader hydraulic valve lever is used to lift the male hitch and the snowblower.
- To RAISE the hitch and equipment, pull on the valve lever.
- To LOWER the hitch, push slightly on the valve lever.
- To place the equipment in FLOAT mode, push on the valve lever completely until it engages and remains in that position. The float mode allows the equipment to follow ground contours when the tractor is moving.

IMPORTANT: Always use float mode when operating the equipment. It is however possible to momentarily lock the position of the equipment when working in an area where the snow has hardened such as roadsides.

OPERATION

Procedure for Connecting and Disconnecting the Snowblower

PRECAUTIONS TO FOLLOW BEFORE EACH CONNECTION

1. Make sure the area is clear of any object that could interfere with the connection.
2. Make sure the maintenance of the 4-point hitch and snowblower is up to date.
3. Make sure the drive system of the of the snowblower is functional and that there is no residue, snow or ice that would impede operation.
4. **Figures 17:** Make sure the drivelines and the hitches two connection points (items 1A, 1B, 2A, 2B) are clean and not covered with snow or ice.
5. **Figure 17:** Make sure the 2 pins of the snowblower hitch (item 3) and the two round wire lock pins (item 4) are well installed on the snowblower housing.
6. **Figure 17:** Make sure the snowblower half driveline (item 5) is secure on the guard's "U" support (item 6).
7. **Figure 17:** Make sure the half male driveline (item 7) is placed on top of the snowblower female hitch.
8. Follow the security measures for operating the tractor.
9. Make sure the tractor PTO is disengaged.

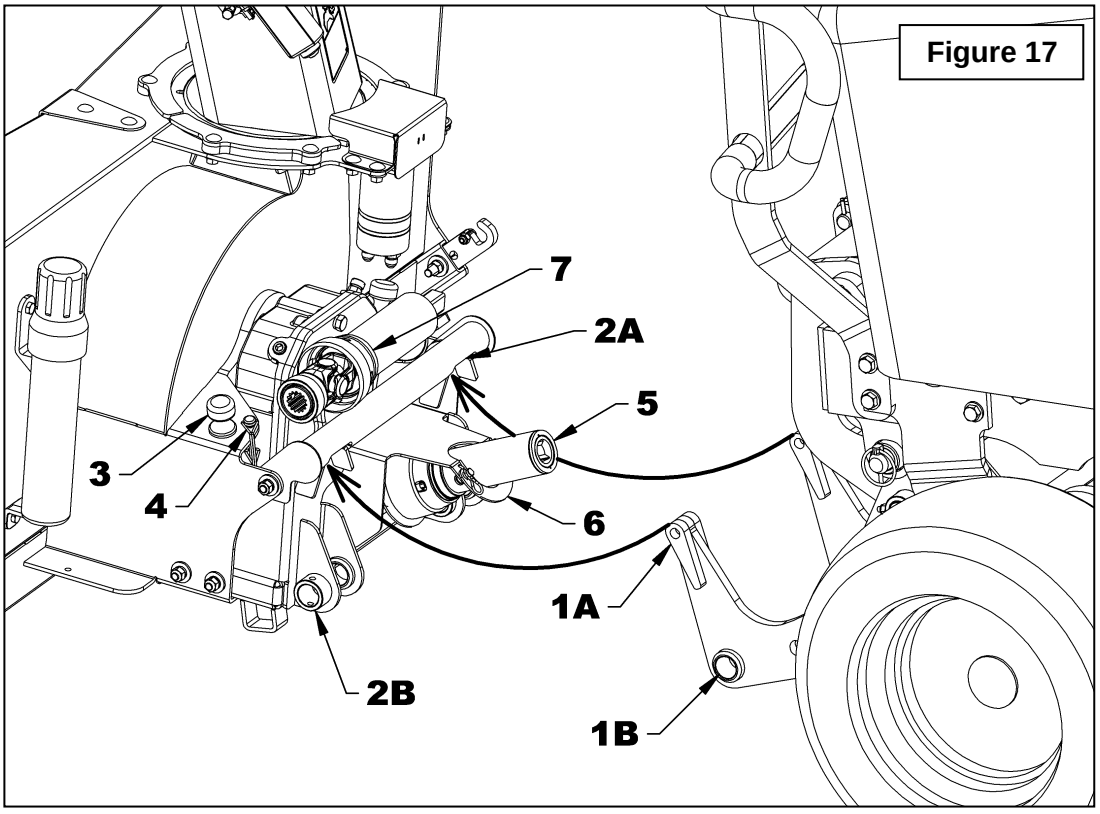

Figure 17

OPERATION

PROCEDURE TO FOLLOW TO CONNECT THE SNOWBLOWER

IT'S IMPORTANT TO FOLLOW THESE STEPS IN THE ORDER INDICATED.

Step 1

Figure 17: Start the tractor, remove the parking brake and advance slowly making sure to align the snowblower female hitch with the male hitch of the tractor. Lower the tractor male hitch enough so the two upper hooks (item 1A) can be inserted in the openings of the female hitch (item 2A).

Step 2

Figure 17: Using the tractor's hydraulic control lever, lift the implement fully up in order to properly position the implement hitch with the tractor male hitch. This step will allow the bushings of the male hitch (item 1B) to align well with the bushings of the snowblower female hitch (item 2B).

WARNING: To avoid serious injuries or death: always engage the lock of the tractor control lever, set the parking brake et turn off the engine before stepping down from the tractor to connect or disconnect the equipment.

Step 3

Figure 18: Insert the two snowblower hitch pins (item 8) into the snowblower hitch bushings (item 9) and secure with the 1/4" round lock pins (item 10).

Step 4

Figure 19: Remove the "U" support (item 11) holding the snowblower half driveline and attach it to the welded pins (item 12) in the opposite direction (upwards) with the two 2.5mm x 40mm hairpins (item 13).

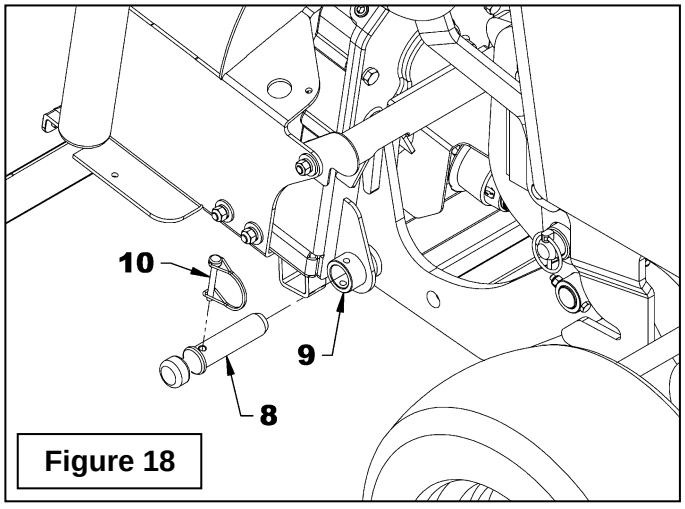

Figure 18

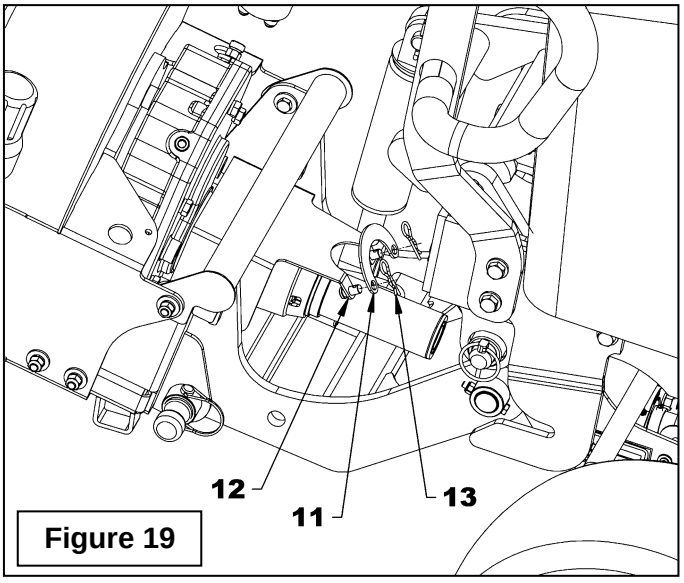

Figure 19

Step 5

Figures 20-21: Place the male half driveline (item 14) under the subframe (item 16) and insert in the snowblower female half driveline (item 15). Attach the male driveline (item 14) to the subframe output shaft (item 17). To do so, disengage the locking collar (item 14a) by pulling it back and push on the yoke (item 14b) to connect the driveline to the subframe output shaft (item 17). Release the yoke and make sure the locking collar is back in its proper position. Pull and push on driveline (item 14) to make sure it's securely locked.

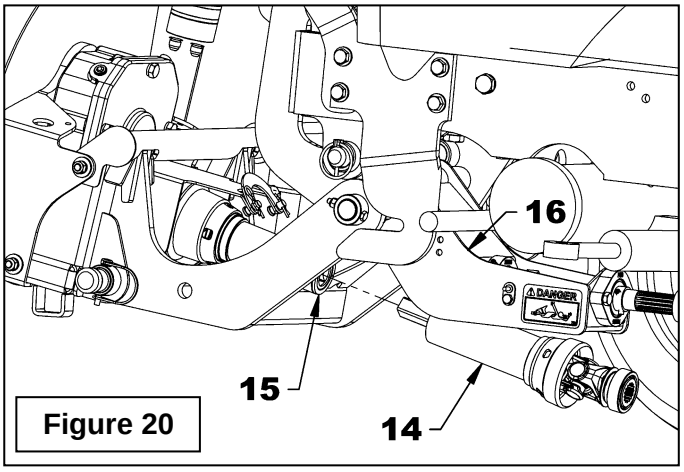

Figure 20

⚠ **WARNING: To avoid serious injury: Make sure that the quick connect yoke is securely locked in place. A "click" must be heard.**

Step 6

Figure 22: Insert the hoses (items 1a and 1b) in the two hose supports (item 2) and fix the hydraulic couplings and the electrical connector of the snowblower to the hydraulic couplings and to the electrical connector of the tractor as shown in **figure 22**. Finally, secure the two hoses with three nylon tie wraps (item 3) and the two black 10"lg hose protectors (item 4) at the locations shown in **figure 20.**

IMPORTANT: Make sure the hydraulic couplers and electric connectors are clean before connecting them.

Step 7

With the hydraulic control lever lower the snowblower to the ground.

Step 8

Adjust the engine speed to **low rpm** and engage the PTO. Increase engine speed gradually until it is at full throttle before beginning to use the snowblower.

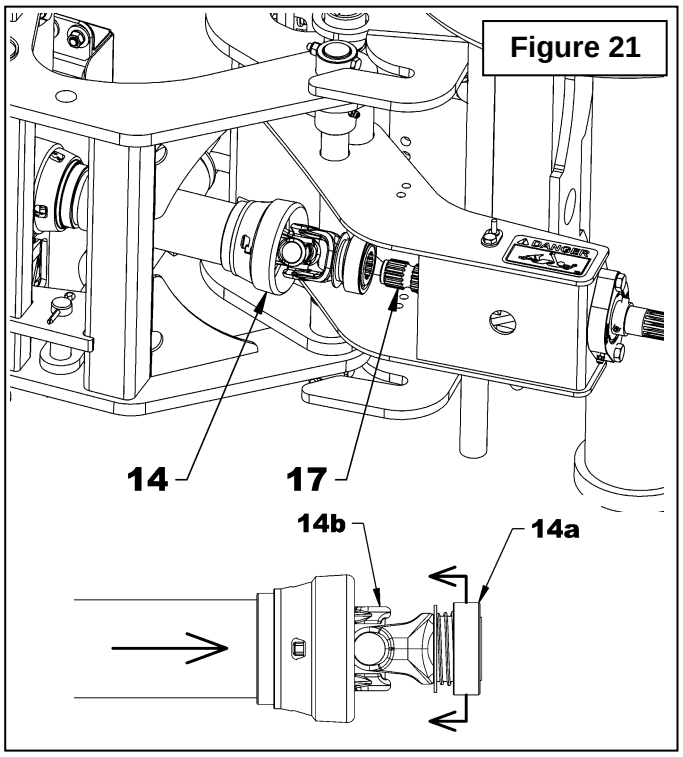

Figure 21

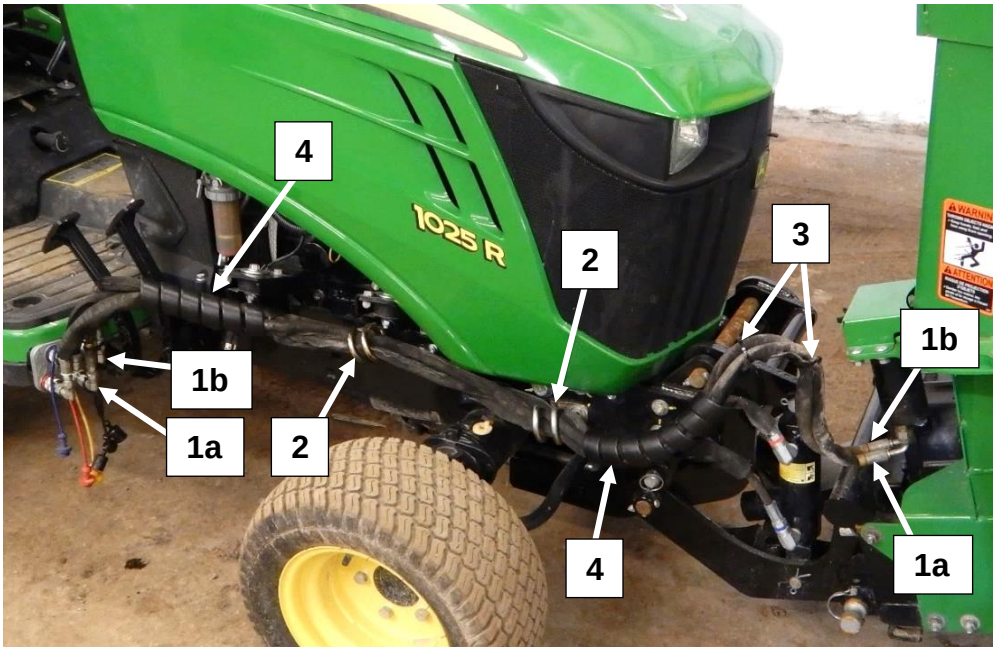

Figure 22

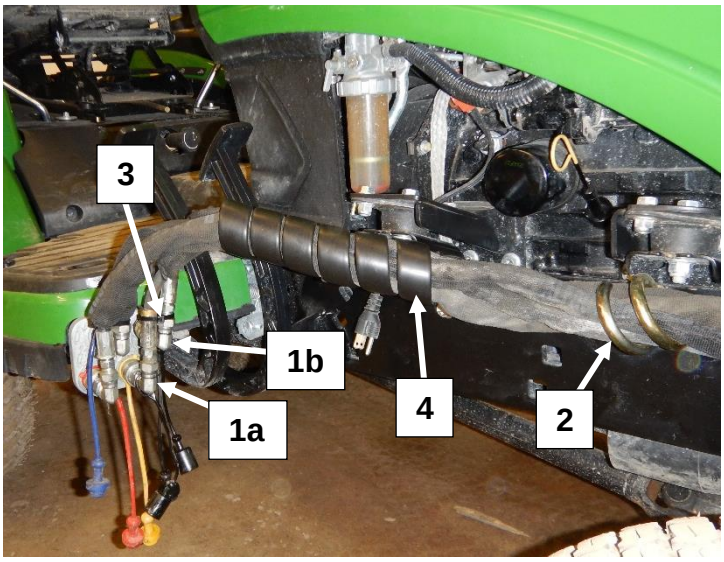

Snowblower raised position

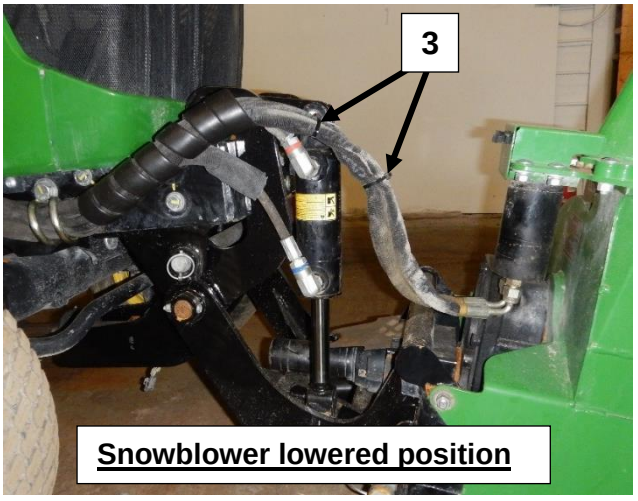

Snowblower lowered position

OPERATION

PRÉCAUTIONS TO FOLLOW BEFORE EACH DISCONNECTION

1. Make sure the area is clear of any object that could interfere with the disconnection.
2. Follow the security measures for operating the tractor.
3. Make sure the tractor PTO is disengaged.

PROCEDURE TO FOLLOW TO DISCONNECT THE SNOWBLOWER

IT'A IMPORTANT TO FOLLOW THESE STEPS IN THE ORDER INDICATED.

Step 1

Start the tractor and raise the snowblower completely using the hydraulic control lever.

WARNING: To avoid serious injuries or death: always engage the lock of the tractor control lever, set the parking brake et turn off the engine before stepping down from the tractor to connect or disconnect the equipment.

Step 2

Figure 23: Disconnect the hydraulic couplers and electric connectors, roll up together the hoses (item 1) and wires and wrap around the chute (item 2) as shown on **figure 23**.

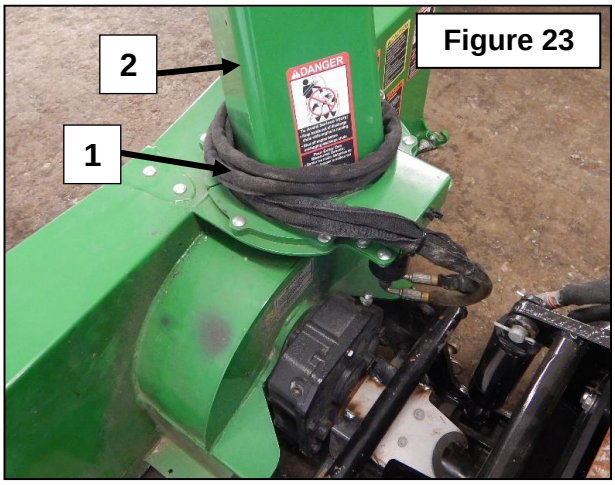

Figure 23

Step 3

Figures 24-25 : Remove the subframe male driveline (item 1) and place it between the tube of the female hitch and the gearbox as shown on figure 25.

Step 4

Figure 25: Remove the "U" support (item 3) from the snowblower's protective guard and secure it in the opposite direction (downward) using the 2 hair pins 2.5mm x 40mm (item 4) in order to retain the female half driveline of the snowblower.

Step 5

Figure 25: Remove round wire lockpins (item 5) and the two snowblower hitch pins (item 6) and insert them in the hole on the snowblower frame.

Step 6

Figure 25: Lower the snowblower slowly to the ground with the tractor's control lever and detach the male hitch (item 8) from the snowblower hitch (item 7) by backing up slowly.

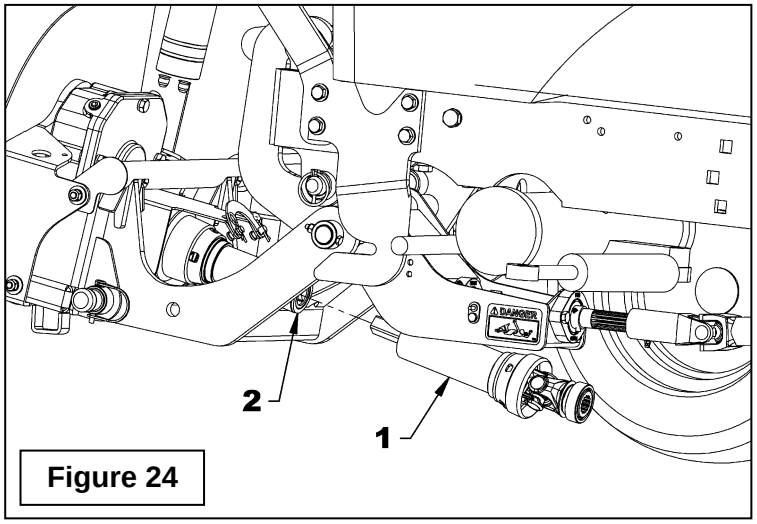

Figure 24

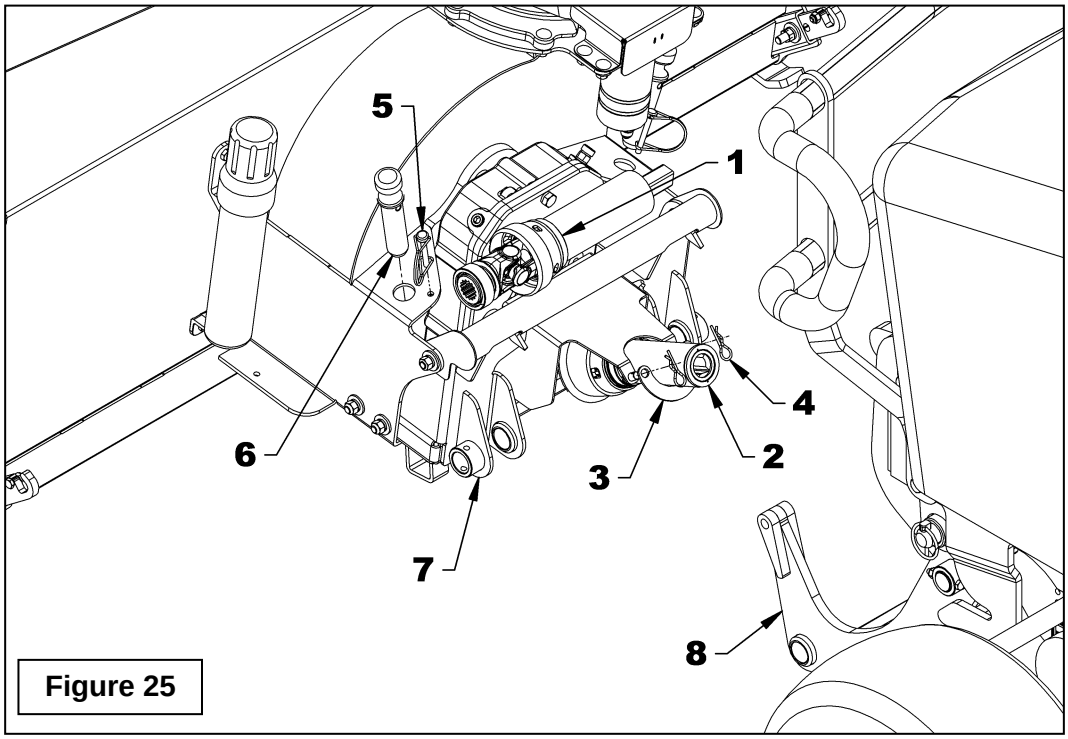

Figure 25

Removing the Subframe from the Tractor

⚠ **WARNING: To avoid serious injury or death: Park the tractor on level ground, set to neutral, apply parking brake, disengage drive, place all control levers to neutral, shut off the engine, remove the ignition key and make sure all parts in rotation have stopped BEFORE removing the subframe from the tractor.**

1. Remove the snowblower from the subframe by following the instructions in the previous section.
2. **Figure 26:** Disconnect the fixed driveline (items 1a-1b) from the tractor PTO (item 3) and the subframe output shaft (item 2).
3. **Figure 27:** Disconnect the hydraulic couplers (items 1-2) and install the dust caps on the hydraulic couplers.
4. **Figure 27:** Remove the two hoses from the hose supports (item 3).
5. **Figure 28:** Remove the linchpin (item 2) and the "L" ø13/16" x 14 1/8" lg pin (item 1) from the subframe and lift the subframe by the upper tube (item 3b) to unhook it from the tractor front. Place the subframe on the ground.
6. **Figure 28:** Reinstall the ø13/16" x 14 1/8" lg "L" pin (item 1) in its appropriate location on the subframe and reinstall the ø3/16" linchpin (item 2).
7. Roll up the hoses and place them on the subframe.

Figure 26

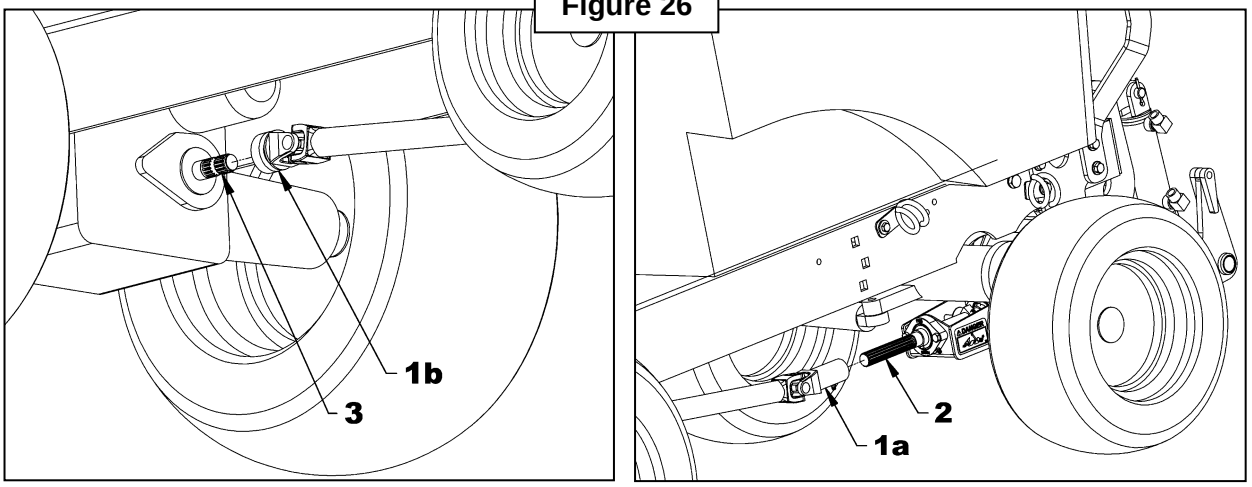

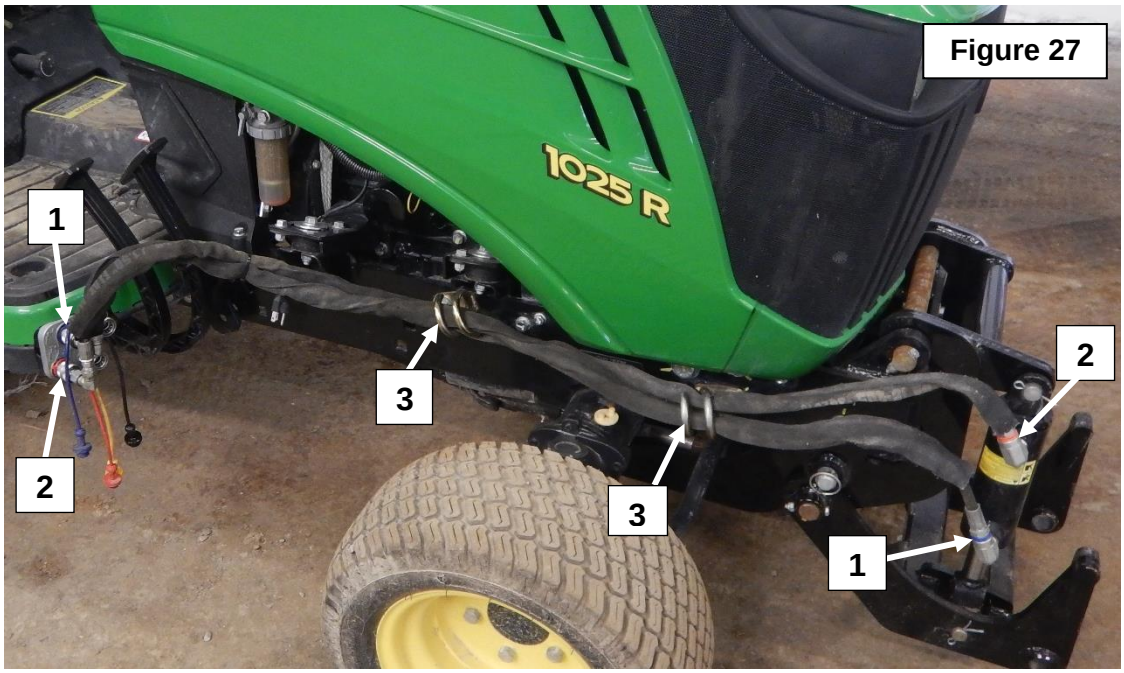

Figure 27

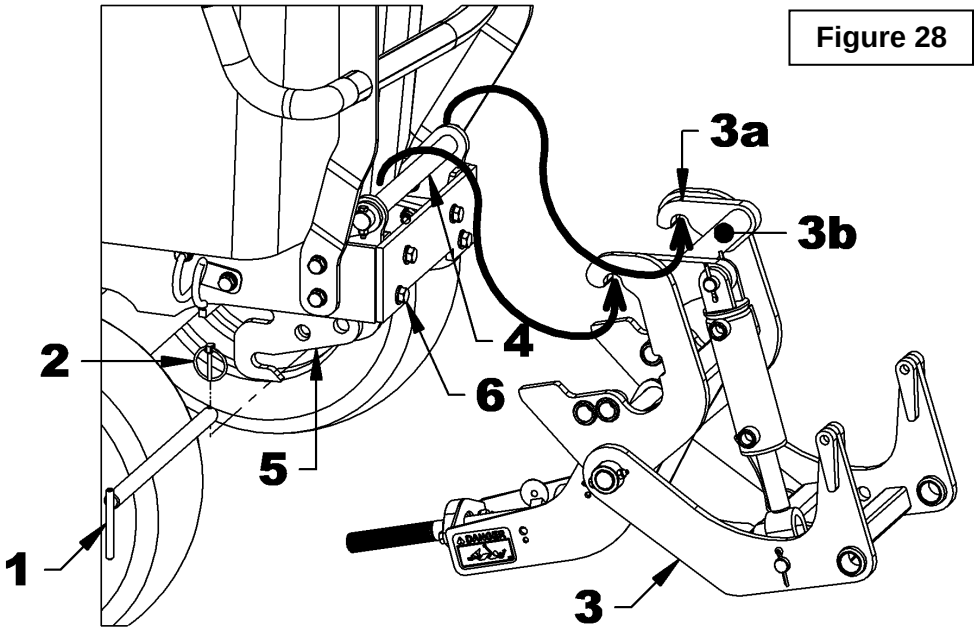

Figure 28

Reinstalling the Subframe on the Tractor

⚠ **WARNING: To avoid serious injury or death: Park the tractor on level ground, set to neutral, apply parking brake, disengage drive, place all control levers to neutral, shut off the engine, remove the ignition key and make sure all parts in rotation have stopped BEFORE reinstalling the subframe from the tractor.**

1. Place the subframe in front of the tractor so the subframe hooks are approximately 6" from the tractor.
2. **Figure 29:** Remove the ø3/16" linchpin (item 2) and the ø13/16" x 14 1/8" lg "L" pin (item 1) from the subframe and lift the subframe by the upper tube (item 3b) to hook it on the front of the tractor.
3. **Figure 29:** Attach the subframe to the front supports with the ø13/16" x 14 1/8" lg "L" pin (item 1) and the ø3/16" linchpin (item 2).
4. **Figure 30:** Insert the hoses (items 1-2) in the two hose supports (item 3) and connect the hydraulic quick couplers as indicated **figure 30**.

   IMPORTANT: Make sure the hydraulic couplers are clean before connecting them.
5. **Figure 31:** Connect the fixed driveline (item 1) to the subframe output shaft (item 2) and the tractor mid PTO (item 3).

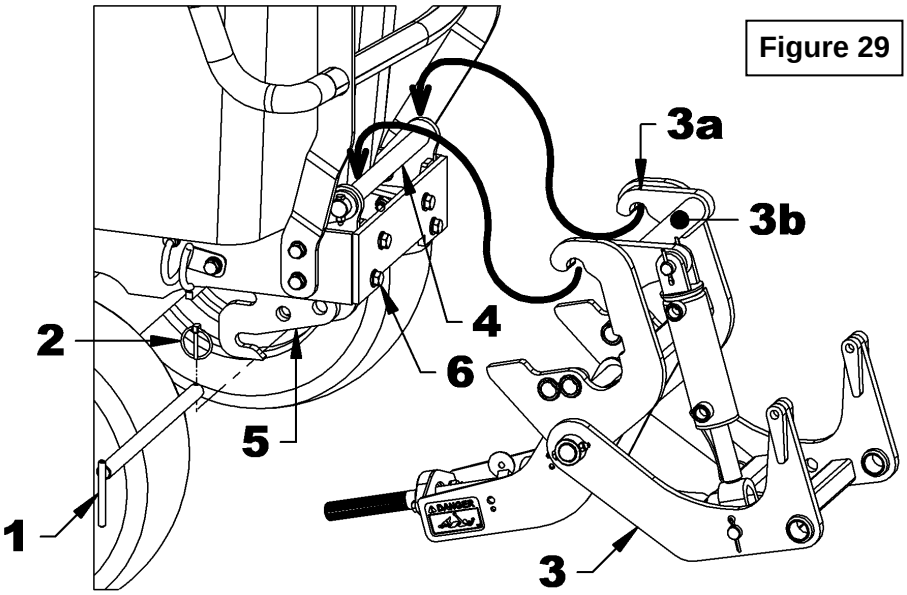

Figure 29

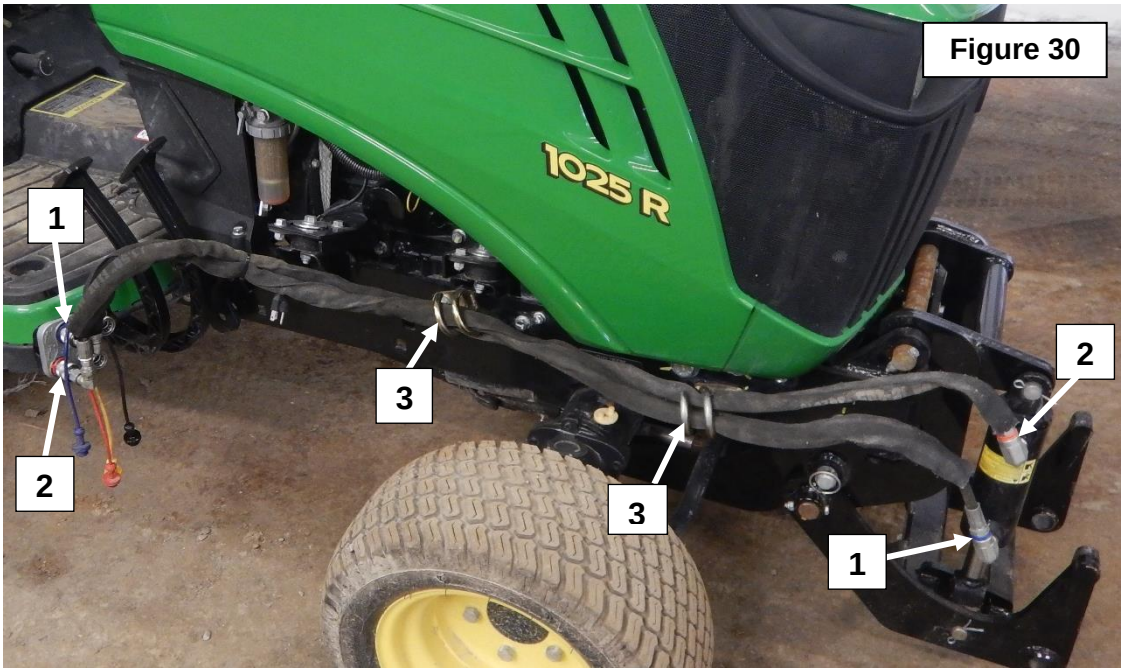

Figure 30

Figure 31

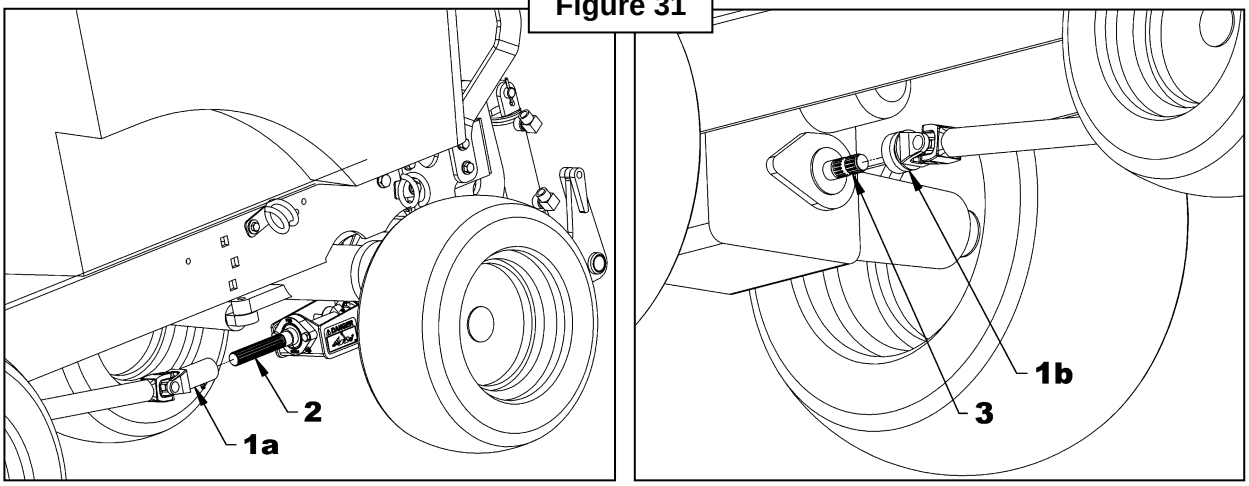

MAINTENANCE

IMPORTANT: Perform all the maintenance section without taking into account the hours given in the following cases:

1. At least once a year if the subframe and drive kit are used less than 20 hours annually.
2. Before each storage period.
3. After each wash.

MAINTENANCE SCHEDULE		
DESCRIPTION	**DESCRIPTION**	**DESCRIPTION**
Hardware	After the first 8 hours of operation 40 hours of operation	• Tightens all bolts and nuts according to the Torque Specification Table.
Connection points	Before each equipment connection	• Visual inspection of the clutch shaft, hydraulic/electric connectors and the hitch connection points. Clean if necessary.
Driveline telescopic joint	Before the fist use 40 hours of operation	• Grease the telescopic joint. • **Use a grease grade N.L.G.I. # 2 with a good thermal and** mechanical **stability that can be used in temperatures ranging from -50°C to 150°C (-58°Fto 302°F)** • Number of pumping cycles: 5
Driveline journal crosses	Before first use 40 hours of operation	• Grease the journal crosses. • **Use a lithium soap grease E.P. compatible grade N.L.G.I. # 2 and containing no more than 1% of molybdenum disulfide.** • Number of pumping cycles: 8-10
Pivot bushings of the hitch	20 hours of operation	• Grease the pivot bushings. • **Use a grease designated "Extreme Pressure" containing** molybdenum **disulfide. This grease should specify "Moly EP" on the label.** • Number of pumping cycles: 3-4
Flange bearings	Before first use 20 hours of operation	• Grease the flange bearings. • **Use a lithium soap grease E.P. compatible grade N.L.G.I. # 2 and containing no more than 1% of molybdenum disulfide.** • Number of pumping cycles: 3-4
Cylinder pins	Twice a year	• Clean and grease the pins and bushings. • **Use a grease designated "Extreme Pressure" containing molybdenum disulfide. This grease should specify "Moly EP" on the label.**
Hydraulic, electric and connection systems	After the first 8 hours 40 hours of operation	• Visual inspection to detect hydraulic leaks. Tighten, repair or replace if necessary. • Visual inspection of the electrical wiring and connectors. Repair or replace if necessary.

MAINTENANCE

LUBRICATION

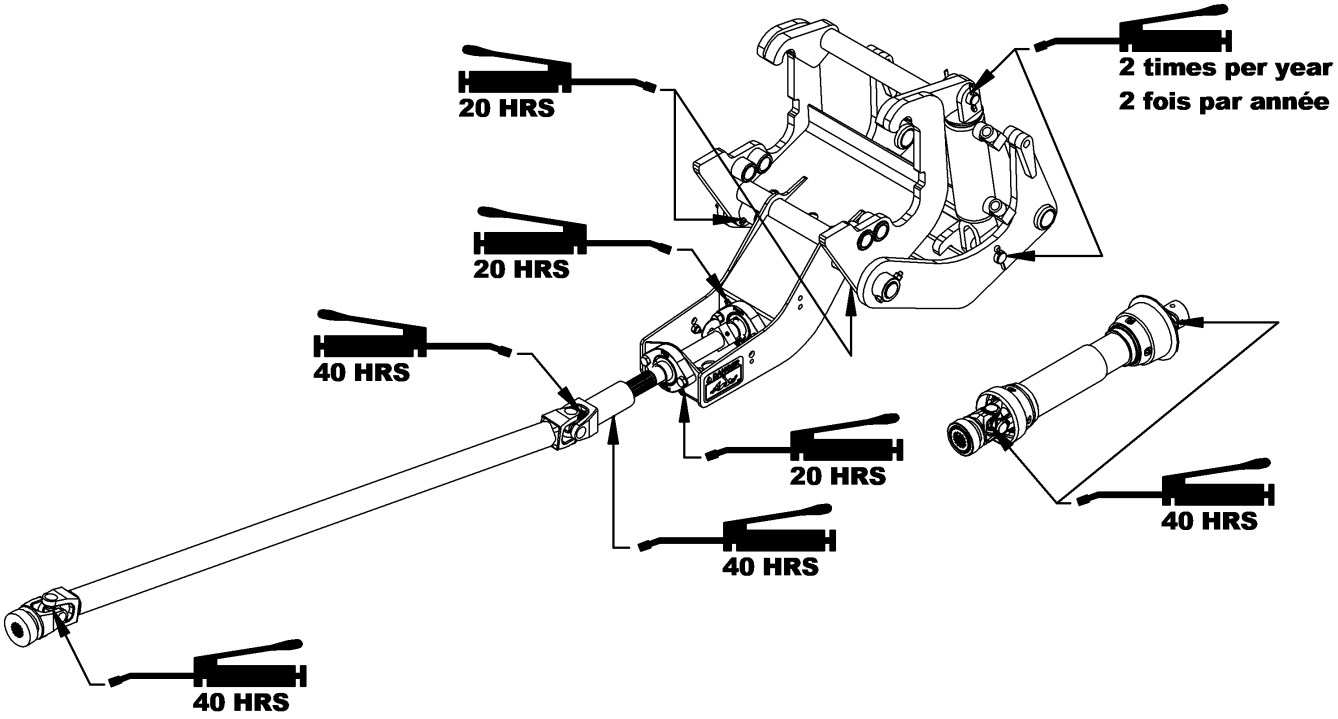

TROUBLE SHOOTING

PROBLEM	POSSIBLE CAUSE	CORRECTIVE MESURES
1. Hydraulic couplers are hard or impossible to connect.	• Hoses, tractor side, are pressurized.	• Turn the engine off and activate the valve control lever in all directions.
	• Female couplers (equipment side) are partially open. The small coupler balls are visible.	• Press on the elbow behind the coupler to reposition the coupler.
	• The hydraulic couplers are defective.	• Repair the couplers. • Replace the hydraulic couplers.
2. During operation of the mechanical drive, there is excessive vibration.	• There is accumulated residue or snow/ice on the drivelines.	• Clean male and female drivelines.
	• One or more drivelines were deformed.	• Check the linearity of the drivelines and replace the deformed drivelines.

STORAGE

Before storing the subframe or hitch, certain precautions should be taken to protect it from deterioration.

1. Clean the subframe and hitch thoroughly.
2. Make all the necessary repairs.
3. Replace all safety signs that are damaged, lost, or otherwise become illegible. If a part to be replaced has a label on it, obtain a new safety label from your dealer and install it in the same place as on the removed part.
4. Repaint all parts from which paint has worn or peeled.
5. Lubricate the subframe and hitch as instructed under **"Lubrication"** section.
6. When the subframe and implement are dry, oil all moving parts. Apply oil liberally to all surfaces to protect against rust.
7. Store in a dry place.

PARTS

HITCH AND SUBFRAME			
REF.	**DESCRIPTION**	**QTY**	**Part#**
1	Hose support	2	670319
2	Pin ø13/16" x 14 1/8" lg	1	673350
3	Left support	1	673347
4	Right support	1	673346
5	Reinforcement support	1	673348
6	Subframe	1	673345
7	Male quick hitch	1	671812
8	Pin ø1" x 13 3/4", PQE	2	671813
9	Hex bolt ø1/4"NC x 1 1/2" lg., Gr.5, PTD	2	0100007
10	Hex bolt ø1/4"NC x 2" lg., Gr.5, PTD	2	0100010
11	Hex bolt ø3/8"NC x 1 1/4" lg., Gr.5, PTD	1	0100039
12	Hex bolt M12 x 1.75 x 35mm Gr.8.8 PTD	4	0200109
13	Hex bolt M12 x 1.75 x 40mm Gr.8.8 PTD	4	0200029
14	Hex bolt M12 x 1.75 x 55mm Gr.8.8 PTD	10	0200034
15	Hex bolt M12 x 1.75 x 65mm Gr.8.8 PTD	4	0200036
16	Hex bolt M12 x 1.75 x 75mm Gr.8.8 PTD	4	0200037
17	Spacer	2	673349
18	Hex nut ø3/8"NC PTD	1	0900003
19	Nylon insert lock nut ø1/4"NC, PTD	4	1000003
20	Nylon insert lock nut M12 x 1.75 PTD	10	1000022
21	Cylinder 2" x 5"	1	665433
	-Pin ø3/4" x 2 1/2" (included with cylinder)	4	665435
	-Cotter pin ø3/16" x 1 1/4" (included with cylinder)	1	1500013
	-Seal kit for 665433 cylinder	2	665434
22	Lockwasher ø3/8", PTD	1	1200004
23	Lockwasher ø12mm PTD	18	1200019
24	Flat washer ø3/8" (ø7/16" INT.), PTD	2	1400004
25	Red identification ring	2	658204
26	Blue identification ring	2	658205
27	Flat washer 12mm PTD	28	1400030
28	Cotter pin ø3/16" x 1 1/2" lg.	2	1500013
29	Linchpin ø3/16", PTD	1	1900004
30	Nylon tie wrap 8" lg. x 4.8mm, black	2	2100003
31	Dust cap 1/4"NPT	2	2600052
32	Hose ø1/4" x 53"lg, 1/4"NPT M x 3/8"NPT 3000Psi	2	3700274
33	Pin ø3/4" x 3 1/2" lg, PTD	1	4600019
34	Grease fitting 1/4"NF	2	654106
35	90° elbow 1/4"NPT M x1/4"NPT Sw. F	2	655211
36	90° elbow 3/8"NPT M x 3/8"NPT F	2	655314
37	Male quick coupler 1/4"NPT	2	657094

PARTS

HITCH AND SUBFRAME

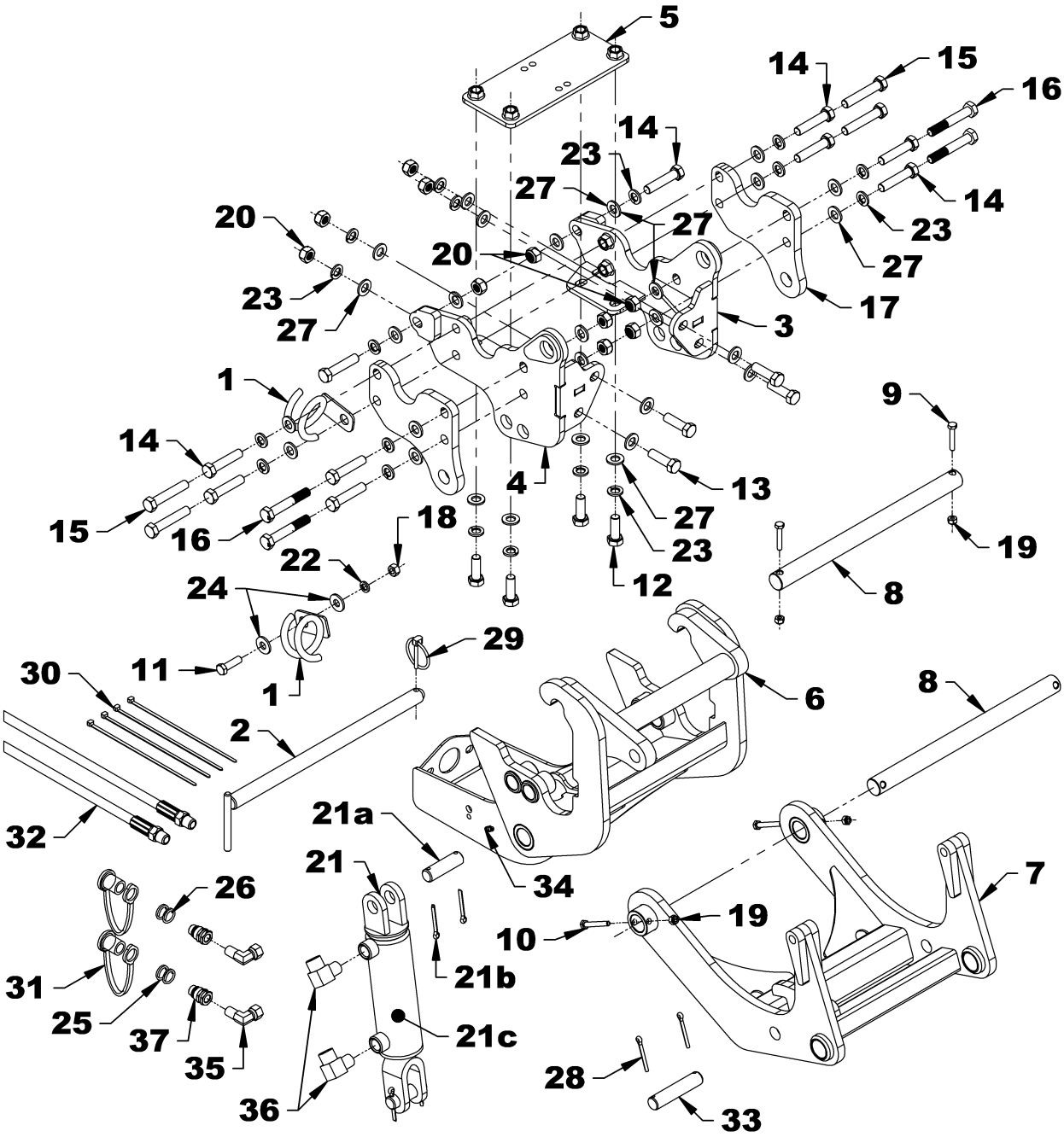

PARTS

DRIVE KIT			
REF.	**DESCRIPTION**	**QTY**	**PART #**
1	Square bar 1 1/4" X 5/8" lg., PTD	1	671802
2	Hex. bolt 1/4"NC x 3/4" lg., Gr.5, PTD	1	0100003
3	Hex bolt ø3/8"NC x 1 1/2" lg., Gr.5, PTD	4	0100040
4	Allen setscrew ø1/4"NF x 1/4" lg., black (included in 4300054)	6	0500003
5	Hex. nut ø3/8"NC PQÉ	4	0900003
6	Nylon insert nut ø1/4"NC, PTD	1	1000003
7	Lockwasher ø3/8", PTD	4	1200004
8	Flat washer ø11/32" ID x 1 1/2" OD – stainless steel	1	1400038
9	Decal "DANGER" #799	2	2501015
10	Flange bearing 1" with grease fittings	2	4300054
11	Driveline – male section	1	4700047
12	Fixed driveline S7E x 40 1/4"	1	4700050
13	Output shaft ø1" x 14 7/8" lg.	1	4700101
14	Grease fitting 1/4"NF (included with 4300054)	2	654106

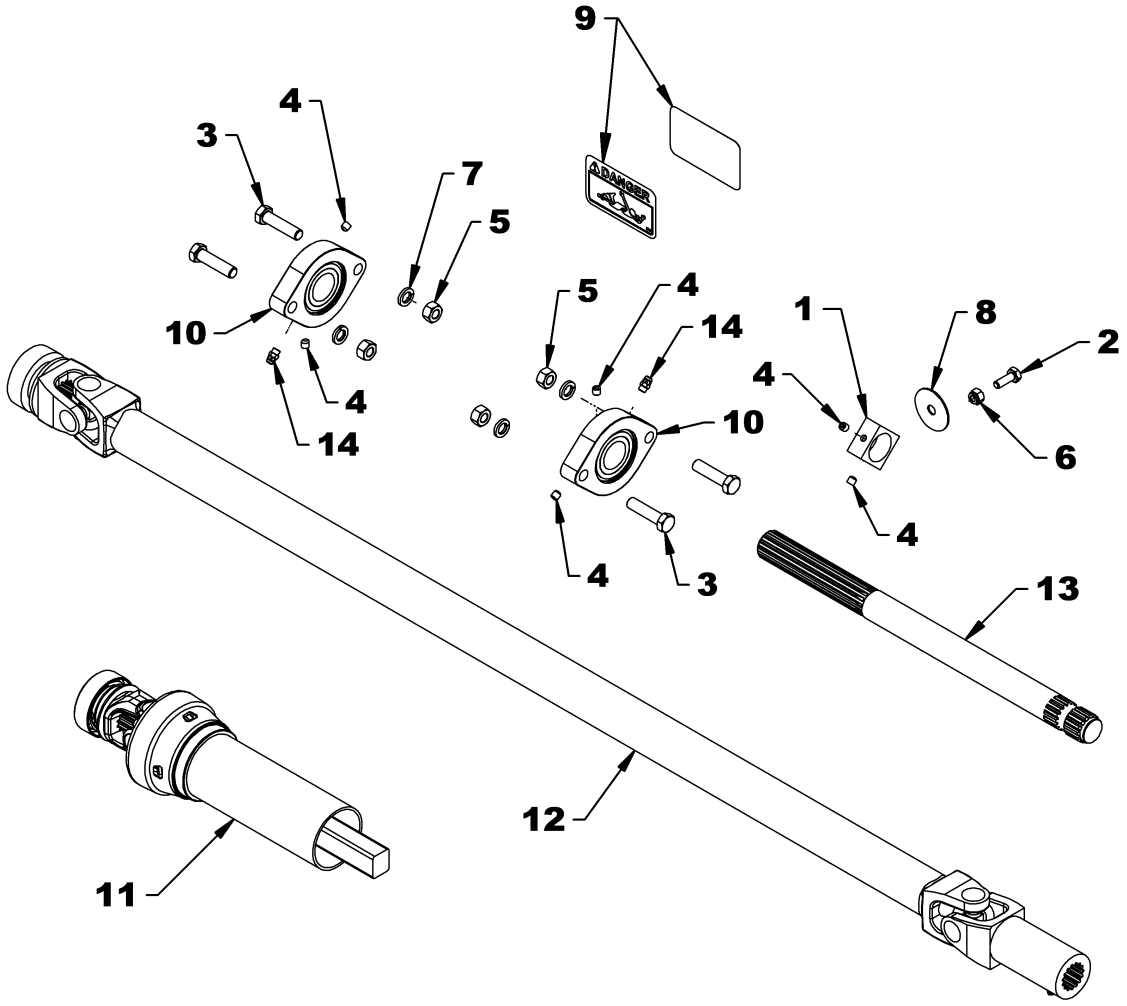

PARTS

DRIVELINE 4700050			
REF.	**DESCRIPTION**	**QTY**	**PART #**
1	Yoke repair kit	1	658113
2	Quick connect yoke	1	665810
3	Journal cross	2	4700066
4	Yoke and shaft	1	4700077
5	Yoke	1	4700068

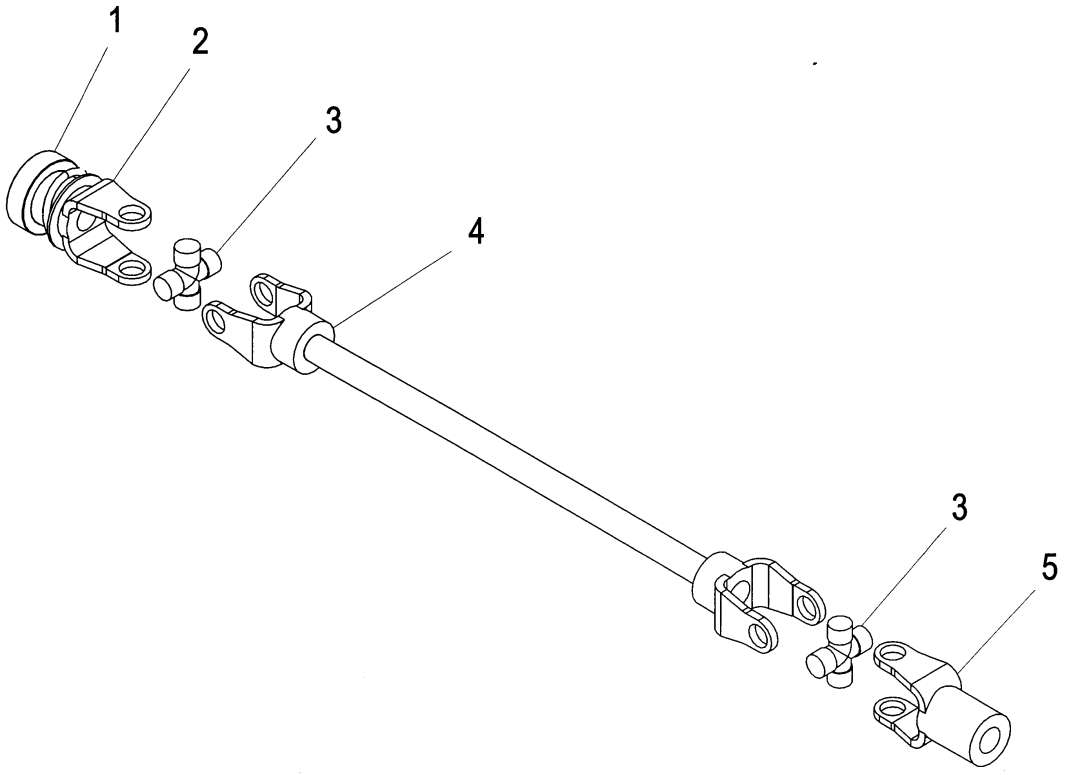

PARTS

DRIVELINE 4700047			
REF.	**DESCRIPTION**	**QTY**	**PART #**
1	Driveline ass'y – male part	1	4700047
2	Quick disconnect yoke ass'y	1	665810
3	Spring lock yoke repair kit	1	658113
4	Universal joint kit	1	4700066
5	Yoke and male shaft ass'y	1	4700075
6	Nylon repair kit	1	661555
7	Outer shield	1	4700078

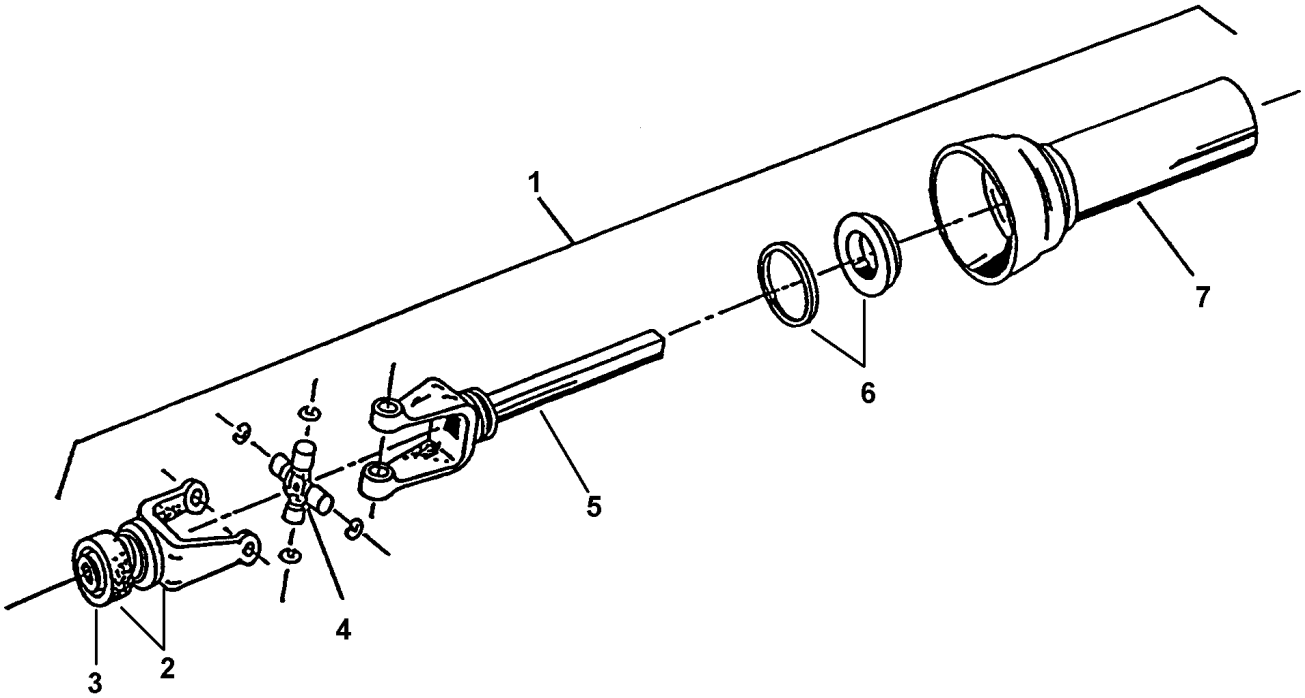

TORQUE SPECIFICATION TABLE

GENERAL SPECIFICATION TABLE

USE THE FOLLOWING TORQUES WHEN SPECIAL TORQUES ARE NOT GIVEN

Note: These values apply to fasteners as received from supplier dry, or when lubricated with normal engine oil. They do not apply if special graphited or moly sidulphide greases or other extreme pressure lubricants are used. These values apply to dry conditions; under lubricated conditions reduce by 25% the torques in this table.

BOLT HEAD IDENTIFICATION

INCHES Bolt Size	Grade 2		Grade 5		Grade 8	
in-tpi [1]	N-m [2]	lbs-ft [3]	N-m	lbs-ft	N-m	lbs-ft
1/4" – 20NC	7.4	5.6	11	8	16	12
1/4" – 28NF	8.5	6	13	10	18	14
5/16" – 18NC	15	11	24	17	33	25
5/16" – 24NF	17	13	26	19	37	27
3/8" – 16NC	27	20	42	31	59	44
3/8" – 24NF	31	22	47	35	67	49
7/16" – 14NC	43	32	67	49	95	70
7/16" – 20NF	49	36	75	55	105	78
1/2" – 13NC	66	49	105	76	145	105
1/2" – 20NF	75	55	115	85	165	120
9/16" – 12NC	95	70	150	110	210	155
9/16" – 18NF	105	79	165	120	235	170
5/8" – 11NC	130	97	205	150	285	210
5/8" – 18NF	150	110	230	170	325	240
3/4" – 10NC	235	170	360	265	510	375
3/4" – 16NF	260	190	405	295	570	420
7/8" – 9NC	225	165	585	430	820	605
7/8" – 14NF	250	185	640	475	905	670
1" – 8NC	340	250	875	645	1230	910
1" – 12NF	370	275	955	705	1350	995
1 1/8" – 7NC	480	355	1080	795	1750	1290
1 1/8" – 12NF	540	395	1210	890	1960	1440
1 1/4" – 7NC	680	500	1520	1120	2460	1820
1 1/4" – 12NF	750	555	1680	1240	2730	2010
1 3/8" – 6NC	890	655	1990	1470	3230	2380
1 3/8" – 12NF	1010	745	2270	1670	3680	2710
1 1/2" – 6NC	1180	870	2640	1950	4290	3160
1 1/2" – 12NF	1330	980	2970	2190	4820	3560

METRIC Bolt Size	5.8 Class 5.8		8.8 Class 8.8		NP 10.9 Class 10.9	
mm$_x$pitch [4]	N-m	lbs-ft	N-m	lbs-ft	N-m	lbs-ft
M 5 X 0.8	4	3	6	5	9	7
M 6 X 1	7	5	11	8	15	11
M 8 X 1.25	17	12	26	19	36	27
M 8 X 1	18	13	28	21	39	29
M10 X 1.5	33	24	52	39	72	53
M10 X 0.75	39	29	61	45	85	62
M12 X 1.75	58	42	91	67	125	93
M12 X 1.5	60	44	95	70	130	97
M12 X 1	90	66	105	77	145	105
M14 X 2	92	68	145	105	200	150
M14 X 1.5	99	73	155	115	215	160
M16 X 2	145	105	225	165	315	230
M16 X 1.5	155	115	240	180	335	245
M18 X 2.5	195	145	310	230	405	300
M18 X 1.5	220	165	350	260	485	355
M20 X 2.5	280	205	440	325	610	450
M20 X 1.5	310	230	650	480	900	665
M24 X 3	480	355	760	560	1050	780
M24 X 2	525	390	830	610	1150	845
M30 X 3.5	960	705	1510	1120	2100	1550
M30 X 2	1060	785	1680	1240	2320	1710
M36 X 3.5	1730	1270	2650	1950	3660	2700
M36 X 2	1880	1380	2960	2190	4100	3220

[1] in-tpi = nominal thread diameter in inches-threads per inch
[2] N-m = newton-meters
[3] lbs-ft= pounds-foot
[4] mm x pitch = nominal thread diameter in millimeters x thread Pitch

*Torque tolerance +0%, -15% of torquing values. Unless otherwise specified use torque values listed above
***NOTE**: 1 lbs-ft = 12 lbs-in

ADAPTER INSTALLATION PROCESS

NPT THREAD IDENTIFICATION & TORQUE

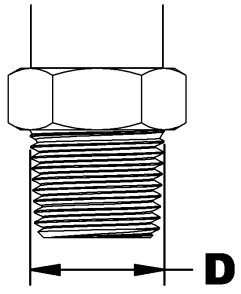

D		Identification of adapter	Number of turns to do after manual tightening
in	mm		
0.375	9.5	1/8 NPT	2.0 - 3.0
0.500	12.5	1/4 NPT	2.0 - 3.0
0.625	15.9	3/8 NPT	2.0 - 3.0
0.780	19.8	1/2 NPT	2.0 - 3.0
0.988	25.1	3/4 NPT	2.0 - 3.0
1.236	31.4	1 NPT	1.5 - 2.5
1.583	40.2	1 1/4 NPT	1.5 - 2.5
1.823	46.3	1 1/2 NPT	1.5 - 2.5

RECOMMENDED ASSEMBLY

The method used to assemble fittings with NPT threads is done in two stages. First firmly tighten by hand then tighten once again according to the number of turns listed in the above table. The following steps are recommended to minimize the risks of leaks and/or damages to the parts.

STEP 1: Inspect threads and tapping to make sure they are clean.

STEP 2: Measure the diameter (D) of the adapter and take note of the size taken.

STEP 3: Apply a sealant/lubricant product to the NPT threads (Teflon covered threads are preferable to other lubricating products). If PTFE tape (Teflon) is used, make between 1.5 or 2 turns clockwise, when viewed by the fitting end, keeping free the two first threads.

CAUTION: More than 2 turns can cause distortion or cracks in the orifice.

STEP 4: Tighten the fitting manually.

STEP 5: Screw the fitting the number of turns listed on the above table making sure that in the case of an elbow fitting the end is aligned to the desired position to connect the tube or hose. **Never unscrew a fitting to obtain the proper alignment.**

STEP 6: If a leak is detected after having followed the preceding instructions, check that the threads are not damaged and the number of seated threads is fulfilled (see details in next paragraph).

If the threads are damaged, replace the fitting. If the tapping is damaged, retap if possible or replace the part.

Usually, the number of threads seated is between 3.5 and 6. If the range is different it would indicate that the fitting was tightened too much or not enough or that the tightening was not within thread tolerances. If the fitting is not tight enough, tighten but never more than one turn. If it's too tight, control the threading and tapping and replace the section that has threads that are not within tolerances.

ADAPTER INSTALLATION PROCESS

JIC THREAD IDENTIFICATION & TORQUE

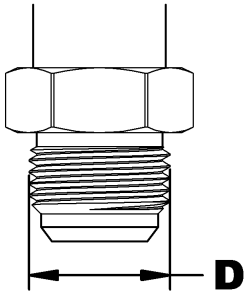

D		Identification	TORQUE	
in	mm	of adapter	lbs-ft	N-m
-	-	5/16 JIC	6-7	8-10
-	-	3/8 JIC	6-9	8-12
0.433	11	7/16 JIC	9-12	12-16
0.496	12.6	1/2 JIC	14-15	19-21
0.559	14.2	9/16 JIC	18-20	24-27
0.740	18.8	3/4 JIC	27-39	37-53
0.870	22.1	7/8 JIC	36-63	49-85
1.055	26.8	1 1/16 JIC	65-88	88-119
1.185	30.1	1 3/16 JIC	75-103	102-140
1.307	33.2	1 5/16 JIC	85-113	115-153
1.618	41.1	1 5/8 JIC	115-133	156-180
1.870	47.5	1 7/8 JIC	125-167	169-226
2.492	63.3	2 1/2 JIC	190-258	258-350

JIC flare fittings seal with metal to metal contact between the flared nose of the fitting and the flared tube face in the female connection.

The minimum torque values listed are to provide a benchmark that give optimum results for leak free connections. Actual torque values should be based on individual application.

NOTE: Do not apply thread sealant (Teflon tape) on the JIC threads.

Leaks can result from vibration, thermal cycling and from loads being supported by the connection (i.e. using the fitting in the connection to support mechanical loads).

IMPORTANT: Use the lowest torque value from the chart when wet torquing.

RECOMMENDED ASSEMBLY

STEP 1: Inspect for possible contamination or damage from shipping or handling. Sealing surface should be smooth.

STEP 2: Lubricate the threads and the entire surface of the cone with hydraulic fluid or a light lubricant.

STEP 3: Align mating components for hand connection and turn flare nut until sealing surfaces make full contact.

STEP 4: Torque nut to the values shown in the above table.

STEP 5: When torquing nut onto a straight flared fitting, it may be necessary to also place a wrench on the flared fitting wrench pad to prevent it from turning during assembly.

ALTERNATE ASSEMBLY METHOD

STEP 1: Inspect for possible contamination or damage from shipping or handling. Sealing surface should be smooth.

STEP 2: Lubricate the threads and the entire surface of the cone with hydraulic fluid or a light lubricant.

STEP 3: Align mating components for hand connection and turn flare nut until sealing surfaces make full contact.

STEP 4: Lightly wrench tighten the nut until there is resistance.

STEP 5: Place a wrench on wrench pad next to nut as near the 6 o'clock position as possible.

STEP 6: Place second wrench on nut as near the 3 o'clock position as possible.

STEP 7: Turn nut clockwise to no less than the 4 o'clock position, but no more than the 6 o'clock position. Required rotation generally decreases as size increases.

ADAPTER INSTALLATION PROCESS

ORB (O-RING BOSS) THREAD IDENTIFICATION & TORQUE

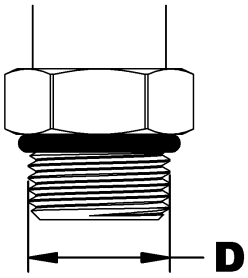

D		Identification	TORQUE	
in	mm	of adapter	lbs-ft	N-m
-		3/8 ORB	8-9	12-13
0.433	11	7/16 ORB	13-15	18-20
0.496	12.6	1/2 ORB	14-15	19-21
0.559	14.2	9/16 ORB	23-24	32-33
0.740	18.8	3/4 ORB	40-43	55-57
0.870	22.1	7/8 ORB	43-48	59-64
1.055	26.8	1 1/16 ORB	68-75	93-101
1.185	30.1	1 3/16 ORB	83-90	113-122
1.307	33.2	1 5/16 ORB	112-123	152-166
1.618	41.1	1 5/8 ORB	146-161	198-218
1.870	47.5	1 7/8 ORB	154-170	209-230
2.492	63.3	2 1/2 ORB	218-240	296-325

SAE O-rings (O-Ring Boss) are straight thread fittings that seal using an O-ring between the thread and the wrench flats of the fitting. The O-ring seals against the machined seat on the female port.

O-ring fittings can be either adjustable or non-adjustable. Nonadjustable fittings are screwed into a port where no alignment is needed. Adjustable fittings can be oriented in a specific direction.

Fittings with O-rings offer advantages over metal-to-metal fittings. Under or over-tightening any fitting can allow leakage, but all-metal fittings are more susceptible to leakage because they must be tightened to a higher and narrower torque range. This makes it easier to strip threads or crack or distort fitting components, which prevents proper sealing.

NOTE: Do not apply thread sealant (Teflon tape) on the ORB threads.

Leaks can also result from vibration, thermal cycling and from loads being supported by the connection (i.e. using the fitting in the connection to support mechanical loads).

IMPORTANT: Use the lowest torque value from the chart when wet torquing.

RECOMMENDED ASSEMBLY ORB (O-RING) NON-ADJUSTABLE

STEP 1: Inspect all components for damage or contamination.

STEP 2: Lubricate O-ring and threads on fitting with your hydraulic system fluid.

STEP 3: Turn fitting into port until finger tight, then torque to the value shown in the following table.

NOTE: Use the lowest torque value from the chart when wet torquing.

RECOMMENDED ASSEMBLY ORB (O-RING) ADJUSTABLE

STEP 1: Inspect all components for damage or contamination.

STEP 2: Lubricate O-ring and threads on fitting with your hydraulic system fluid.

STEP 3: Looking at fitting from the male ORB end, turn manually the nut as far as possible from the O-ring.

STEP 4: Using wrench, turn fitting into port until the washer touches thread nearest wrench pad.

STEP 5: Back off fitting counterclockwise not exceeding one revolution until it is oriented in the correct position.

STEP 6 : Place wrench on the wrench pad of fitting to prevent fitting from turning, and torque nut to the value shown in the above table.

Manufactured by:

Dalkotech Group

RAD Technologies Inc.
2835, Chemin de l'Aéroport
Thetford Mines, Québec, Canada, G6G 5R7

T +1 418 338-4499 - F +1 418 338-2522

info@radtech.ca
radtech.ca

Printed in Canada